TABLETOP SCENICS

Citadel Paint Rack

Hobby Accessories

1

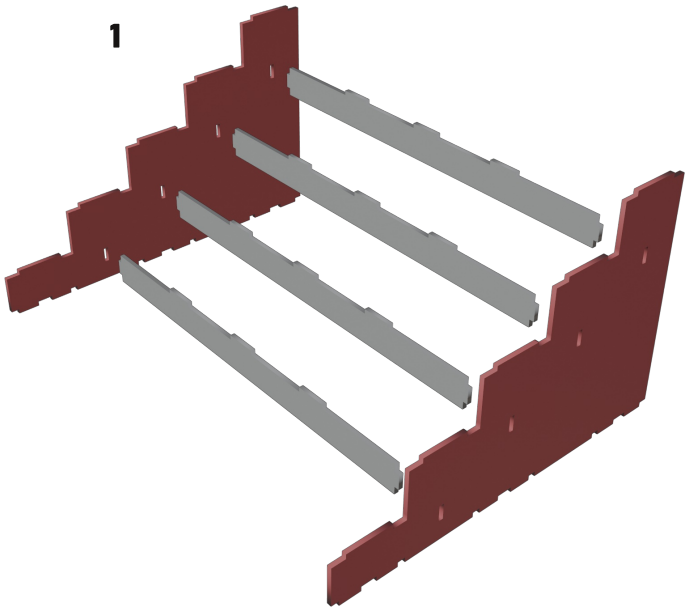

2

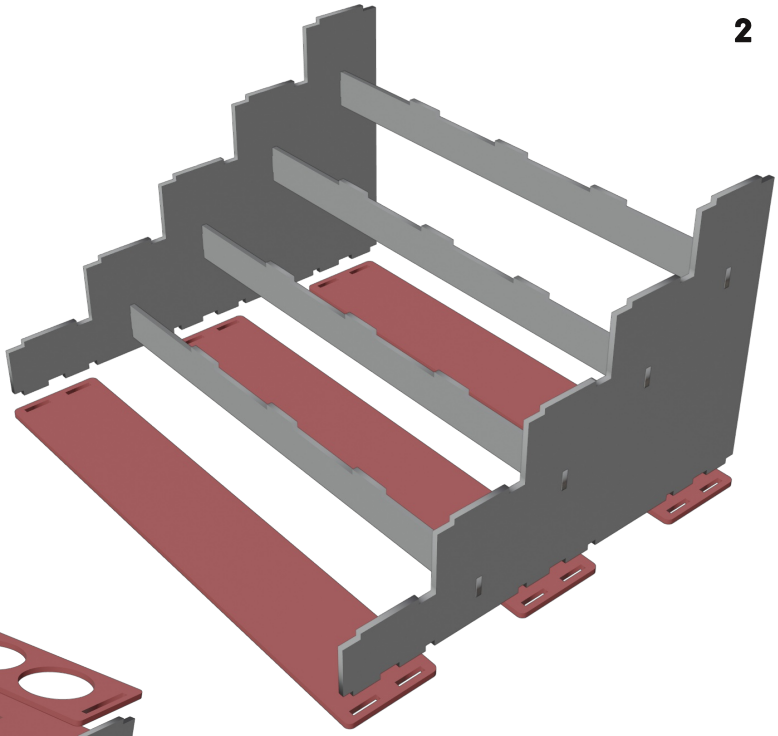

3

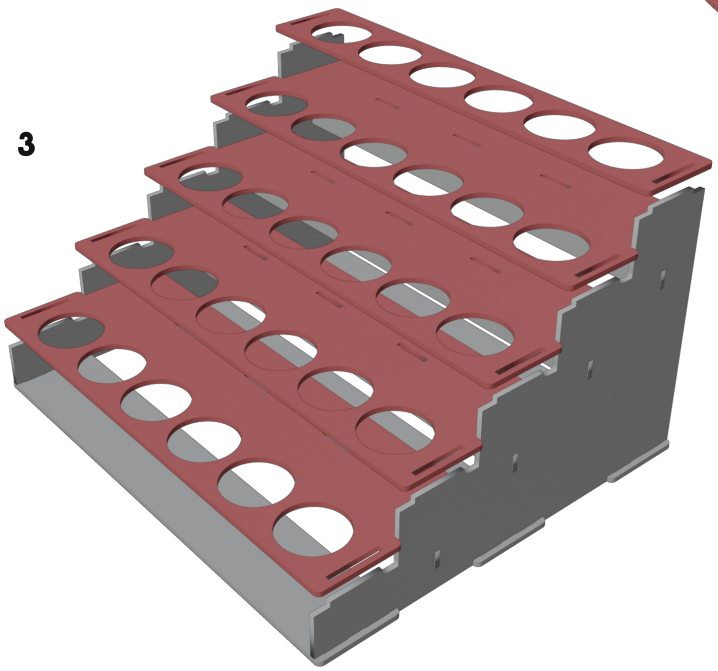

TTCOMBAT

Warning: This product is not a toy. Contains small parts. Not suitable for children under 14 years.