pure ultra®

USER MANUAL

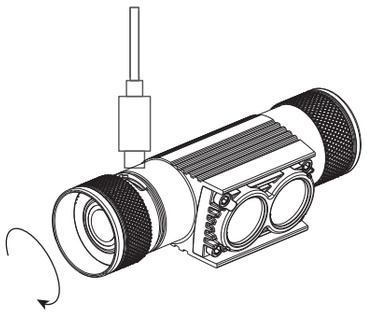

H12

Headlamp with Neutral White light

Thank you for being a part of our PureUltra family. Please read this manual carefully before use and keep it for future reference!

Guarantee/Warranty

Headlamp within **3 years** of purchase, battery within **1 year** of purchase, accessories within **30 days** of purchase. Pls email PureUltra directly via global customer support email address: **support@pureultras.com** for repair or replacement, or pls contact the point of sale from which the product was purchased within 30 days.
The seller reserves the right to subsequent performance before refunding the purchase price. Necessary transport costs will be reimbursed to the customer if a justified claim of the legal warranty is established. The exercise of the statutory rights in respect of defects shall be free of charge to repair or replacement.

Warranty is provided by manufacturer:
ShenZhen PureUltra Technology Co., LTD.
PureUltra, Building 1, No. 43 Cuijing Road,
Pingshan Dist., Shenzhen, China 518122
www.pureultras.com
Email: support@pureultras.com

Made in China

PureUltra hereby declares that this product (H12 headlamp) in conformity with the essential requirements of the applicable European Directives. EU-Declaration of Conformity can be found here: www.pureultras.com

6 976366 490066
Item number: H12

www.pureultras.com

PureUltra H12

PureUltra H12 rechargeable headlamp uses neutral white LEDs with a color temperature around 5000K that suits for close-in illumination specifically designed for comfortable lighting, 150 degrees large floodlighting designed reflector houses two built-in LEDs give the H12 a max output of 1200 lumens and a max throw of 150 meters. Comes with an optional 18650 4000mAh large-capacity newest technique battery features an amazing max runtime of 300 hours at the lowest 5-lumen output. Hidden USB Type-C charging port for go-anywhere charging. The included headband bracket provides comfort and adjustability for a perfect fit in every situation, 180° adjustable tilt angle for different illumination needs. H12 is your unmatched choice for long-time and high-intensity outdoor activities.

What's in the box

H12*1, PureUltra 18650 Battery*1, USB Type-C Charging Cable*1, Headband*1, Top Strap*1, Bracket*1, Spare O-rings*1, User Manual*1, Gift Box*1.

H12 | PureUltra 18650 Battery | USB Type-C Charging Cable | Headband, Top Strap, Bracket

Specifications

MODE - BRIGHTNESS LEVEL - OUTPUT RATIO - RUNTIME

TURBO	1200-600-180 Lumens	100% 10min, 50% 4hours, 12% 20min
HIGH	600 - 150 Lumens	100% 340min, 25% 30min
MEDIUM	250 Lumens	100% 8hours
LOW	22 Lumens	100% 72hours
MOON	5 Lumens	100% 300hours
WHITE FLASH	1200 Lumens	100% 3hours

ANSI/PLATO FL 1-2019 STD	Technical Data					
	TURBO	HIGH	MEDIUM	LOW	MOON	FLASHING
	1200-600 Lumens	600-150 Lumens	250 Lumens	22 Lumens	5 Lumens	1200 Lumens
	4h30min	6h10min	8h	72h	300h	3h
	150m	115m	72m	25m	8m	150m
	5,625cd	3,307cd	1,296cd	157cd	16cd	5,625cd
	1.0m (Impact Resistance)					
	IP66 dust-proof and waterproof					
	Dimensions: 87mm × 31.5mm × 24.5mm (3.42" × 1.24" × 0.96")					
	97g (3.42oz) (Battery included, Headband / Bracket excluded)					

Note: The stated data is measured in accordance with the international testing standards of ANSI/PLATO FL 1-2019, using a new fresh PureUltra 18650 4000mAh Li-ion battery with a high discharge current 10A under laboratory conditions. The data may vary in real world use due to different battery usage or heat dissipation or environmental conditions.

Features

- Dual built-in LEDs deliver a max output of 1200 lumens and a max throw of 150m.
- The main advantage of the H12 is that it uses neutral white LEDs with a color temperature around 5000K that suits for close-in illumination, specifically designed for comfortable lighting and thus reduce visual fatigue.
- The working mode of Flashing is right for danger warning and emergency preparedness.
- 150 degrees large flood light designed reflector for close-up illumination which produces a broad vision, wide range, smooth & balanced light.
- Elastic and reflective headband remains visible at night for safe activities, the headband equipped with a removable TOP STRAP which provides an excellent stability in dynamic and intense activities.
- The included bracket (headlamp holder) provides 180° up and down adjustable tilt angle for different illumination needs ensure all-round lighting, more adapted to the needs of outdoor workers and enthusiasts. The arc side of bracket well-fit for the forehead, comfortable to wear.
- Comes with an optional 18650 4000mAh Li-ion battery specially designed for long runtime which could reach up to 300 hours at the 5-lumen moon output.
- Hidden USB Type-C charging port with waterproof design.
- With power indicator indicates remaining battery power.
- Side switch, one key control, easy operate.
- Lens with double-sided anti-reflection coating for clearly lighting.
- Impact resistant to 1.0 meter. Rating in accordance with IP66.
- Dimensions: 87mm × 31.5mm × 24.5mm (3.42" × 1.24" × 0.96").
- Net Weight: 97g (3.42oz) (Battery included, Headband / Bracket excluded).

Product Overview

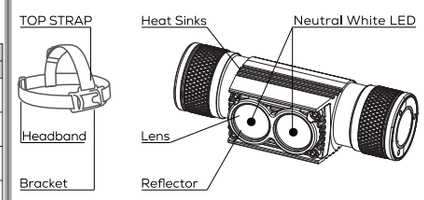

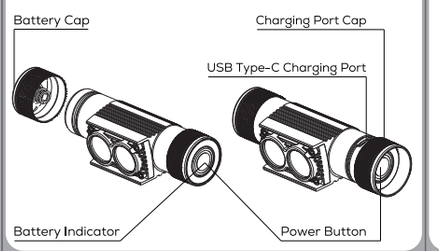

Before First Use

- As illustrated, before first use, please unscrew the battery cap and remove the insulating film within the battery compartment.

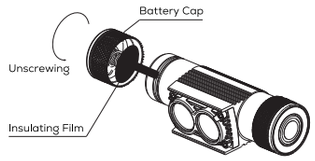

- Before first use, please fully charge the product.

Charging

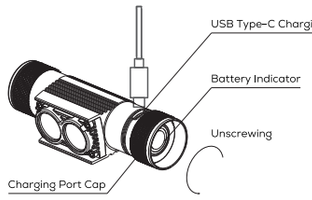

- The H12 is equipped with an intelligent charging system and built-in a hidden USB Type-C charging port. As illustrated, firstly tighten the Battery Cap after inserting the battery, secondly unscrew the Charging Port Cap until the charging port is fully exposed, and then use the USB cable to connect an external power supply (e.g. a USB adapter or other USB charging devices such as your mobile phone charger, power bank, or computer) to the charging port to begin the charging process.
- Battery Indicator:
  Red means charging, Green means charging completed (battery level>95%). Green flashing means that the battery hasn't been inserted or the Battery Cap hasn't been tightened tightly.

Note: Better charging efficiency with a USB power source of no less than 10W (5V 2A). The charging time will be longer than 4 hours when the USB power supply is insufficient to provide 5V 2A power capacity.

Charging Parameter	Specification
Charging Cable	USB Type-C charging cable, length: 0.3m
Input	5V 2A, Max. 9V 2A
Max. Charging Current	2A
Voltage of Fully Charged Battery Pack	4.20V±0.03V
Charge Indication	Red: charging Green: charging completed (over 95%) Green Flashing: battery isn't inserted or the Battery Cap isn't tightened tightly
Time to Fully Charged	4h when the USB power supply is 5V 2A 3h when the USB power supply is 9V 2A

Supported Battery

DESCRIPTION	TYPE	VOL-TAGE	COMPATIBILITY
PureUltra Nipple Top 18650 Rechargeable Li-ion Battery with PCB	18650	3.7V	√ Yes, recommended
Other Brands' Nipple Top 18650 Rechargeable Li-ion Battery with PCB	18650	3.7V	√ Yes, compatible
Flat Top 18650 Rechargeable Li-ion Battery **without PCB**	18650	3.7V	× No, forbidden
21700 Rechargeable Li-ion Battery	21700	3.7V	× No, incompatible
CR123A Non-rechargeable Primary Battery	CR123A	3.0V	× No, incompatible
RCR123A (16340) Rechargeable Li-ion Battery	RCR123A	3.7V	× No, incompatible

- For better performance and safer to use with greater durability, it is highly recommended to use PureUltra up-to-date 18650 4000mAh real capacity Li-ion rechargeable battery with Protection Circuit Built-in discharge current 10A.

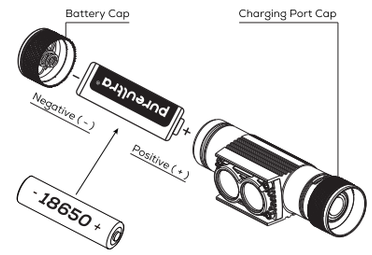

Battery Installation: As illustrated, insert the battery and screw to tighten the Battery Cap. Ensure the battery is inserted with the Positive (+) end pointing to the Charging Port Cap, the Negative (−) end towards the spring on the Battery Cap. The product will not work if the battery is incorrectly inserted.

Battery Indicator

When turning on the H12 headlamp, the battery indicator lights up and then automatically goes out after 5 seconds. Indicator displays the current battery power level, the corresponding relationship is as follows:

Indicator Status	Remaining Battery Power	Recommend Operation
Green	Very Adequate (60%-100%)	Safe To Use
Yellow	Comparatively Adequate (30%-60%)	Normal Use
Red	Less (10%-30%)	Pay Attention To Remaining Battery Power
Blink Thrice (Flashing Red)	Running Out Soon (1%-10%)	Please Charge

Low Battery Warning:
The battery indicator light will blink thrice (flashing red) when the remaining battery power is lower than 10% in the power-on state, reminding you that you should charge it in good time to avoid shortening or damaging the battery life.

CAUTION :
DO NOT cover the headlamp or place the headlamp's lens on the ground or put it close to other flammable objects when turned on to avoid accidents. Otherwise, the radiation energy of the headlamp may cause damage to the lens itself, or even result in burning to flammable objects.

DANGER :
DO NOT throw the light directly into the human eyes. This may cause temporary blindness, or permanent damage to the eyes.

DO NOT disassemble the sealing parts of the headlamp. Otherwise, the warranty will be voidable and the headlamp may be damaged.

DO NOT use poor-quality battery or non-protected battery. Otherwise, battery may leak or explode and damage the headlamp. It is highly recommended to use PureUltra 18650 4000mAh real capacity Li-ion rechargeable battery with PCB.

WARNING :
Li-ion battery should be charged in good time before it is exhausted, or it can be easily damaged when working at low remaining battery power level.

If the headlamp is about to be carried or transported in a pocket or bag, please unscrew the battery cap for half a circle to cut off the circuit to avoid activating the headlamp accidentally (To prevent false triggering).

If the headlamp is not used for a long time, pls take the battery out and keep it in a dry and safe place. Don't mix battery with conductive metal.

If the O-ring of the headlamp is damaged after long-term use, please replace O-ring in time to maintain the waterproof performance of the headlamp.

NOTICE :
Active thermal management through the built-in intelligent temperature control system: when the H12 works in TURBO brightness output level for a long time and reaches the default temperature limit (the hot surface can reach 50°C), the output would gradually reduce to prevent overheating and ensure safety.

It is not recommended to use TURBO brightness level continuously. When the remaining battery power is low, the internal MCU automatically blocks TURBO brightness level and start to dim, this is normal. We suggest you to charge the PureUltra 18650 4000mAh battery after every use to keep it ready to use.

EXCLUSION CLAUSE :
The product has been thoroughly checked for quality and functionality before dispatch, and the customer undertakes to read the user manual instructions carefully before making a claim under the guarantee / warranty in order to rule out any operating errors. PureUltra is not liable for the following cases:

- in the event of cover the headlamp's lens when the headlamp is power-on
- in the event of use poor-quality batteries or non-protected batteries
- in the event of changes to the product or disassemble the sealing parts
- in the event of defects caused by improper maintenance and / or repair
- in the event of use other than for the intended purpose. INTENDED USE: This device (H12 headlamp) is intended to be used as a headlamp. Any other use shall be deemed inappropriate.

DISCLAIMER :
PureUltra shall not be liable for damages caused by falling accidents, or injuries sustained resulting from the usage of the H12 inconsistent with the **CAUTION / DANGER / WARNING / NOTICE** in the user manual, including but not limited to using the H12 inconsistent with the **EXCLUSION CLAUSE** as described above.

CONTENTS

(EN) English _ _ _ _ _ _ 01
(DE) Deutsch _ _ _ _ _ _ 01
(FI) Suomi _ _ _ _ _ _ _ 02
(HU) Magyar _ _ _ _ _ _ 02
(ES) Español _ _ _ _ _ _ 02
(FR) Français _ _ _ _ _ _ 03
(PT) Português _ _ _ _ _ 03
(AR) العربيّة _ _ _ _ _ _ 03
(NL) Nederlands _ _ _ _ _ 04
(SV-SE) Svenska _ _ _ _ 04
(NO) Norsk _ _ _ _ _ _ _ 04
(PL) Polski _ _ _ _ _ _ _ 05
(RO) Română _ _ _ _ _ _ 05
(CS-CZ) Česky _ _ _ _ _ 05
(DA-DK) Dansk _ _ _ _ _ 06
(IT) Italiano _ _ _ _ _ _ 06
(JA-JP) 日本語 _ _ _ _ _ 06

(EN) English

HOW TO OPERATE

ON/OFF: single click the power button to turn on the headlamp, single click the power button to turn off the headlamp if there is no operation within 3 seconds in the power-on state. Press and hold the power button for 1 second in any brightness levels or working modes to turn off the headlamp.

CHANGE BRIGHTNESS LEVEL: after turning on the headlamp, single click the power button to cycle through the brightness levels sequence as follows: Medium -> High -> Low -> Turn off -> Medium.

MOON ACTIVATION: in the power-off state, press and hold the power button for 1 second to access the MOON brightness level.

TURBO ACTIVATION: double click the power button to access the TURBO brightness level.

FLASHING WORKING MODE ACTIVATION: in TURBO brightness level state, double click the power button to access the flashing working mode.

(DE) Deutsch

BEDIENUNGSANLEITUNG

EIN/AUS: klicken Sie einmal auf die Einschalttaste, um die Stirnlampe einzuschalten. Klicken Sie einmal auf die Einschalttaste, um die Stirnlampe auszuschalten, wenn im eingeschalteten Zustand innerhalb von 3 Sekunden keine Bedienung erfolgt. Halten Sie die Einschalttaste in allen Helligkeitsstufen oder Betriebsmodi 1 Sekunde lang gedrückt, um die Stirnlampe auszuschalten.

HELLIGKEITSSTUFE ZU ÄNDERN: klicken Sie nach dem Einschalten der Stirnlampe einmal auf die Einschalttaste, um die Helligkeitsstufen wie folgt zu durchlaufen: Mittel -> Hoch -> Niedrig -> Ausschalten -> Mittel.

Helligkeitsstufenaktivierung Mondlicht: halten Sie im ausgeschalteten Zustand die Einschalttaste 1 Sekunde lang gedrückt, um die Helligkeitsstufe Mondlicht aufzurufen.

Helligkeitsstufenaktivierung Turbo: doppelklicken Sie auf die Einschalttaste, um auf die Turbo-Helligkeitsstufe zuzugreifen.

Aktivierung Des Blinkenden Arbeitsmodus: doppelklicken Sie im Zustand der Turbo-Helligkeitsstufe auf die Einschalttaste, um auf den blinkenden Arbeitsmodus zuzugreifen.

(FI) Suomi

MITEN KÄYTETÄÄN

ON/OFF: yhdellä napsautuksella kytket ajovalon päälle virtapainiketta, yhdellä napsautuksella virtapainiketta sammuttaaksesi ajovalon, jos mitään toimintoa ei tehdä 3 sekunnin kuluessa virran ollessa päällä. Sammuta ajovalo painamalla virtapainiketta 1 sekunnin ajan kaikilla kirkkaustasoilla tai työtiloilla.

Muuta Kirkkaustasoja: kun olet sytyttänyt ajovalon, napsauta virtapainiketta yhdellä napsautuksella selataksesi kirkkaustasoja seuraavasti: Keskitaso -> Korkea -> Matala -> Sammuta -> Keskitaso.

Kuunvalon Kirkkaustason Aktivointi: kun virta on katkaistu, paina virtapainiketta ja pidä se painettuna 1 sekunnin ajan päästäksesi kuunvalon kirkkaustasoon.

Turbon Kirkkaustason Aktivointi: kaksoisnapsauta virtapainiketta päästäksesi turbon kirkkaustasoon.

Vilkkuvan Työtilan Aktivointi: turbon kirkkaustason tilassa kaksoisnapsauta virtapainiketta päästäksesi vilkkuvaan työtilaan.

(HU) Magyar

HASZNÁLATI ÚTMUTATÓ

Be/kikapcsolás: egyszeri kattintással kapcsolja be a bekapcsológombot a fényszóró bekapcsolásához, egyszeri kattintással a bekapcsológombra a fényszóró kikapcsolásához, ha bekapcsolt állapotban 3 másodpercen belül nem történik művelet. Nyomja meg és tartsa lenyomva a bekapcsológombot 1 másodpercig bármilyen fényerőszinten vagy üzemmódban a fényszóró kikapcsolásához.

Fényerő Szint Választás: a fényszóró bekapcsolása után egyetlen kattintással a bekapcsológombra válthat a fényerőszintek sorrendjében az alábbiak szerint: Közepes -> Magas -> Alacsony -> Kikapcsolva -> Közepes.

Holdfény-fényerőszint Aktiválása: kikapcsolt állapotban nyomja meg és tartsa lenyomva a bekapcsológombot 1 másodpercig a holdfény fényerejének eléréséhez.

Turbó Fényerőszint Aktiválása: kattintson duplán a bekapcsológombra a turbó fényerőszint eléréséhez.

Villogó üzemmód Aktiválása: turbó fényerejű állapotban kattintson duplán a bekapcsológombra a villogó üzemmód eléréséhez.

(ES) Español

COMO OPERAR

ENCENDIDO/APAGADO: haga clic una vez en el botón de encendido para encender el faro, haga clic una vez en el botón de encendido para apagar el faro si no se realiza ninguna operación dentro de los 3 segundos en el estado de encendido. Mantenga presionado el botón de encendido durante 1 segundo en cualquier nivel de brillo o modo de trabajo para apagar el faro.

Cambiar el Nivel de Brillo: después de encender el faro, haga clic una vez en el botón de encendido para recorrer la secuencia de niveles de brillo de la siguiente manera: Medio -> Alto -> Bajo -> Apagar -> Medio.

Activación Del Nivel de Brillo de La Luz de La Luna: en el estado apagado, presione y mantenga presionado el botón de encendido durante 1 segundo para acceder al nivel de brillo de la luz de la luna.

Activación Del Nivel de Brillo Turbo: haga doble clic en el botón de encendido para acceder al nivel de brillo turbo.

Activación Del Modo de Funcionamiento Intermitente: en el estado de nivel de brillo turbo, haga doble clic en el botón de encendido para acceder al modo de funcionamiento intermitente.

(FR) Français

COMMENT OPÉRER

Marche/Arrêt: cliquez une fois sur le bouton d'alimentation pour allumer la lampe frontale, cliquez une fois sur le bouton d'alimentation pour éteindre la lampe frontale s'il n'y a aucune opération dans les 3 secondes à la mise sous tension. Appuyez et maintenez enfoncé le bouton d'alimentation pendant 1 seconde dans n'importe quel niveau de luminosité ou mode de fonctionnement pour éteindre la lampe frontale.

Changer le Niveau de Luminosité: après avoir allumé la lampe frontale, cliquez une fois sur le bouton d'alimentation pour parcourir la séquence des niveaux de luminosité comme suit: Moyen -> élevé -> Faible -> éteindre -> Moyen.

Activation du Niveau de Luminosité au Clair de Lune: à l'état de mise hors tension, appuyez et maintenez enfoncé le bouton d'alimentation pendant 1 seconde pour accéder au niveau de luminosité au clair de lune.

Activation du Niveau De Luminosité Turbo: double-cliquez sur le bouton d'alimentation pour accéder au niveau de luminosité turbo.

Activation du Mode de Fonctionnement Clignotant: en état de niveau de luminosité turbo, double-cliquez sur le bouton d'alimentation pour accéder au mode de fonctionnement clignotant.

(PT) Português

COMO OPERAR

LIGAR/DESLIGAR: clique uma vez no botão liga/desliga para ligar o farol, clique uma vez no botão liga/desliga para desligar o farol se não houver operação dentro de 3 segundos no estado ligado. Pressione e segure o botão liga / desliga por 1 segundo em qualquer nível de brilho ou modo de trabalho para desligar o farol.

Mude o Nível de Brilho: depois de ligar o farol, clique uma vez no botão liga / desliga para percorrer a sequência de níveis de brilho da seguinte forma: Médio -> Alto -> Baixo -> Desligar -> Médio.

Ativação do Nível de Brilho do Luar: no estado desligado, pressione e segure o botão liga / desliga por 1 segundo para acessar o nível de brilho do luar.

Ativação do Nível de Brilho Turbo: clique duas vezes no botão de energia para acessar o nível de brilho turbo.

Ativação do Modo de Trabalho Piscante: no estado de nível de brilho turbo, clique duas vezes no botão de energia para acessar o modo de trabalho piscante.

(AR) العربيّة

طريقة التشغيل

إيقاف/تشغيل: انقر مرة واحدة على زر الطاقة لتشغيل المصباح الأمامي، وانقر مرة واحدة على زر الطاقة لإيقاف تشغيل المصباح الأمامي إذا لم يكن هناك تشغيل خلال 3 ثوانٍ في حالة التشغيل. اضغط مع الاستمرار على زر الطاقة لمدة ثانية واحدة في أي مستويات سطوع أو أوضاع عمل لإيقاف تشغيل المصباح الأمامي.

تغيير مستوى السطوع: بعد تشغيل المصباح الأمامي، انقر مرة واحدة على زر الطاقة للتنقل عبر تسلسل مستويات السطوع كما يلي: متوسط -> مرتفع -> منخفض -> إيقاف -> متوسط.

تفعيل مستوى سطوع ضوء القمر: في حالة إيقاف التشغيل، اضغط مع الاستمرار على زر الطاقة لمدة ثانية واحدة للوصول إلى مستوى سطوع ضوء القمر.

تنشيط مستوى سطوع التربو: انقر على زر الطاقة مرتين للوصول إلى مستوى سطوع التربو.

تنشيط وضع العمل الوامض: في مستوى السطوع من الضوء التربو، انقر على زر الطاقة مرتين للدخول في وضع العمل.

(NL) Nederlands

HOE TE BEDIENEN

AAN/UIT: klik één keer op de aan / uit-knop om de koplamp in te schakelen, klik één keer op de aan/uit-knop om de koplamp uit te schakelen als er binnen 3 seconden geen bediening plaatsvindt terwijl de lamp is ingeschakeld. Houd de aan / uit-knop in een willekeurig helderheidsniveau of in een werkmodus 1 seconde ingedrukt om de koplamp uit te schakelen.

HELDERHEIDSNIVEAU WIJZIGEN: na het inschakelen van de koplamp klikt u één keer op de aan/uit-knop om als volgt door de reeks helderheidsniveaus te bladeren: Medium -> Hoog -> Laag -> Uitschakelen -> Medium.

Activering Van Het Helderheidsniveau Van Het Maanlicht: houd in de uitgeschakelde toestand de aan/uit-knop 1 seconde ingedrukt om toegang te krijgen tot het helderheidsniveau van het maanlicht.

Activering Van Het Turbohelderheidsniveau: dubbelklik op de aan/uit-knop om toegang te krijgen tot het turbo-helderheidsniveau.

Activering Van De Knipperende Werkmodus: in de turbo-helderheidsnieveaustatus, dubbelklikt u op de aan/uit-knop om toegang te krijgen tot de knipperende werkmodus.

(SV-SE) Svenska

HUR MAN FUNGERAR

PÅ/AV: enkelklicka på strömknappen för att tända strålkastaren, enkelklicka på strömbrytaren för att släcka strålkastaren om ingen åtgärd görs inom 3 sekunder i strömtillståndet. Tryck och håll in strömknappen i 1 sekund i valfri ljusstyrka eller arbetsläge för att stänga av strålkastaren.

Ändra Ljusstyrka: efter att ha slagit på strålkastaren, enkelklicka på strömbrytaren för att bläddra genom ljusstyrkenivåerna enligt följande: Medium -> Hög -> Låg -> Stäng Av -> Medium.

Aktivering Av Månskenets Ljusstyrka: i avstängt läge, tryck och håll in strömknappen i 1 sekund för att komma åt månskenets ljusstyrka.

Aktivering Av Turboljusstyrka: dubbelklicka på strömknappen för att komma åt turboljusstyrkan.

Aktivering Av Blinkande Arbetsläge: i läge för turboljusstyrka, dubbelklicka på strömknappen för att komma åt det blinkande arbetsläget.

(NO) Norsk

HVORDAN BETJENES

PÅ/AV: enkeltklikk på strømknappen for å slå på hodelykten, enkeltklikk på strømknappen for å slå av hodelykten hvis det ikke er noen operasjon innen 3 sekunder i slått på. Trykk og hold inne strømknappen i 1 sekund i alle lysstyrkenivåer eller arbeidsmoduser for å slå av hodelykten.

Endre Lysstyrkenivå: etter å ha slått på hodelykten, enkeltklikk på strømknappen for å bla gjennom lysstyrkenivåene som følger: Medium -> Høy -> Lav -> Slå Av -> Medium.

Aktivering Av Lysstyrkenivå for Måneskinn: i avslått tilstand, trykk og hold inne strømknappen i 1 sekund for å få tilgang til lysstyrkenivået for måneskinn.

Aktivering Av Turbolysstyrkenivå: dobbeltklikk på strømknappen for å få tilgang til turbolysstyrkenivået.

Blinkende Arbeidsmodusaktivering: i turbolysstyrkenivå, dobbeltklikk på strømknappen for å få tilgang til den blinkende arbeidsmodusen.

(PL) Polski

JAK DZIAŁAĆ

WŁĄCZ/WYŁĄCZ: pojedyncze kliknięcie przycisku zasilania powoduje włączenie reflektora, pojedyncze kliknięcie przycisku zasilania powoduje wyłączenie reflektora, jeśli w stanie włączonym nie zostanie wykonana żadna operacja w ciągu 3 sekund. Naciśnij i przytrzymaj przycisk zasilania przez 1 sekundę w dowolnym poziomie jasności lub trybie pracy, aby wyłączyć latarkę.

ZMIEŃ POZIOM JASNOŚCI: po włączeniu latarki kliknij raz przycisk zasilania, aby przełączać sekwencję poziomów jasności w następujący sposób: średni -> Wysoki -> Niski -> Wyłącz -> średni.

Aktywacja Poziomu Jasności światła Księżyca: w stanie wyłączenia naciśnij i przytrzymaj przycisk zasilania przez 1 sekundę, aby uzyskać dostęp do poziomu jasności światła księżyca.

Aktywacja Poziomu Jasności Turbo: kliknij dwukrotnie przycisk zasilania, aby uzyskać dostęp do poziomu jasności turbo.

Aktywacja Trybu Pracy Migania: w stanie poziomu jasności turbo kliknij dwukrotnie przycisk zasilania, aby uzyskać dostęp do trybu pracy migania.

(RO) Română

INSTRUCȚIUNI DE UTILIZARE

Pornit/Oprit: faceți un singur clic pe butonul de pornire pentru a aprinde farul, faceți un singur clic pe butonul de pornire pentru a stinge farul dacă nu există nicio operațiune în decurs de 3 secunde în starea de pornire. Apăsați și mențineți apăsat butonul de pornire timp de 1 secundă în orice nivel de luminozitate sau mod de lucru pentru a stinge farul.

Schimbare Nivel Luminozitate: după aprinderea farului, faceți un singur clic pe butonul de pornire pentru a parcurge secvența nivelurilor de luminozitate, după cum urmează: Mediu -> Ridicat -> Scăzut -> Stinge -> Mediu.

Activarea Nivelului de Luminozitate la Lumina Lunii: în starea de oprire, apăsați și mențineți apăsat butonul de pornire timp de 1 secundă pentru a accesa nivelul de luminozitate la lumina lunii.

Activarea Nivelului de Luminozitate Turbo: faceți dublu clic pe butonul de pornire pentru a accesa nivelul de luminozitate turbo.

Activarea Modului de Lucru Intermitent: în starea nivelului de luminozitate turbo, faceți dublu clic pe butonul de alimentare pentru a accesa modul de lucru intermitent.

(CS-CZ) Česky

JAK PROVOZOVAT

ZAPNUTO / VYPNUTO : jedním kliknutím na tlačítko napájení zapnete čelovku, jedním kliknutím na tlačítko napájení vypnete čelovku, pokud během 3 sekund v zapnutém stavu neproběhne žádná operace. Chcete-li čelovku vypnout, stiskněte a podržte tlačítko napájení po dobu 1 sekundy v jakékoli úrovni jasu nebo pracovních režimech.

Změna Úrovně Jasu: po zapnutí čelovky jedním kliknutím na tlačítko napájení procházejte pořadí úrovní jasu takto: Střední -> Vysoký -> Nízký -> Vypnout -> Střední.

Aktivace Úrovně Jasu Měsíčního Svitu: ve vypnutém stavu stiskněte a podržte tlačítko napájení po dobu 1 sekundy, abyste získali přístup k úrovni jasu měsíčního svitu.

Aktivace Úrovně Jasu Turbo: dvakrát klikněte na tlačítko napájení pro přístup k úrovni turbo jasu.

Aktivace Blikajícího Pracovního Režimu: ve stavu úrovně jasu turbo dvojitým kliknutím na tlačítko napájení přejděte do blikajícího pracovního režimu.

(DA-DK) Dansk

SÅDAN FUNGERER DU

Tænde/Slukke: enkelt klik på tænd/sluk-knappen for at tænde forlygten, enkelt klik på tænd/sluk-knappen for at slukke for forlygten, hvis der ikke er nogen betjening inden for 3 sekunder i tændt tilstand. Tryk og hold tænd/sluk-knappen nede i 1 sekund i alle lysstyrkeniveauer eller arbejdstilstande for at slukke for forlygten.

SKIFT LYSSTYRKE-NIVEAU: efter at have tændt forlygten, skal du et enkelt klik på tænd/sluk-knappen for at gå gennem lysstyrke-sekvensen som følger: Medium -> Høj -> Lav -> Sluk -> Medium.

Aktivering af Måneskinslysstyrkeniveau: i slukket tilstand skal du trykke på tænd/sluk-knappen og holde den nede i 1 sekund for at få adgang til måneskinslysstyrkeniveauet.

Aktivering af Turbolysstyrkeniveau: dobbeltklik på tænd/sluk-knappen for at få adgang til turbolysstyrkeniveauet.

Aktivering af Blinkende Arbejdstilstand: i tilstanden turbolysstyrke, dobbeltklik på tænd/sluk-knappen for at få adgang til den blinkende arbejdstilstand.

(IT) Italiano

COME OPERARE

Accendi/Spegni: fare clic una volta sul pulsante di accensione per accendere la lampada frontale, fare clic una volta sul pulsante di accensione per spegnere la lampada frontale se non viene eseguita alcuna operazione entro 3 secondi nello stato di accensione. Tenere premuto il pulsante di accensione per uno secondo in qualsiasi livello di luminosità o modalità di funzionamento per spegnere la lampada frontale.

Cambia Livello di Luminosità: dopo aver acceso la lampada frontale, fare clic una volta sul pulsante di accensione per scorrere la sequenza dei livelli di luminosità come segue: Medio -> Alto -> Basso -> Spegni -> Medio.

Attivazione Del Livello di Luminosità Al Chiaro di Luna: nello stato di spegnimento, tenere premuto il pulsante di accensione per 1 secondo per accedere al livello di luminosità al chiaro di luna.

Attivazione Del Livello di Luminosità Turbo: fare doppio clic sul pulsante di accensione per accedere al livello di luminosità turbo.

Attivazione Della Modalità di Funzionamento Lampeggiante: nello stato di livello di luminosità turbo, fare doppio clic sul pulsante di accensione per accedere alla modalità di funzionamento lampeggiante.

(JA-JP) 日本語

操作の説明

オン/オフ: ヘッドランプをオンにするには、電源ボタンを 1 回クリックします。電源オン状態で 3 秒以内に操作がない場合、ヘッドランプをオフにするには、電源ボタンを 1 回クリックします。ヘッドランプをオフにするには、どの明るさレベルまたは動作モードでも、電源ボタンを 1 秒間押し続けます。

輝度レベルを変更: ヘッドランプをオンにした後、電源ボタンを 1 回クリックすると、明るさレベルの順序が次のように切り替わります: 中 -> 高 -> 低 -> オフ -> 中。

ムーンライト明るさレベルの有効化: 電源オフ状態で、電源ボタンを 1 秒間押し続けると、ムーンライト明るさレベルにアクセスできます。

ターボ明るさレベルの有効化: 電源ボタンをダブルクリックして、ターボ輝度レベルにアクセスします。

点滅動作モードの有効化: ターボ輝度レベルの状態で、電源ボタンをダブルクリックして、点滅動作モードにアクセスします。