ITEM	PART NO.	DESCRIPTION	QTY.
1	DG0669	GRATE: HEAVY DUTY BAR SS – 48.00"	1
2	DA0642BHS	LOCKING DEVICE	2
3	DP0710C	CLOSED INLET	1
4	DA0670F	CLOSED OUTLET (W/4" KNOCKOUT)	1
5	DA0633	INSTALLATION CHAIR	2
6	DG0700AC	FRAME W/END PLATE 700 SERIES DUCTILE IRON – 2FT	2
7	LIT–PC8	INSTALLATION MANUAL	1
8	DP0610	CHANNEL SLOPED POLYCAST 600 – 48.00"	1

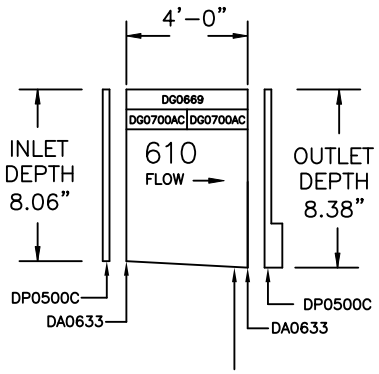

BOTTOM OUTLET
(BY CUSTOMER)

DRILL SIZE 3.50" FOR 3.0" SCH 40 & 80 PVC
DRILL SIZE 4.25" FOR 4.0" SCR–35 SEWER & DRAIN
DRILL SIZE 4.50" FOR 4.0" SCH 40 & 80 PVC

CUSTOMER APPROVAL

DATE: _____

NAME: _____

SIGNATURE: _____

I HAVE REVIEWED THE SYSTEM DIMENSIONS PROVIDED AND APPROVE TDS TO PROCEED WITH RELEASING FOR PRODUCTION. I UNDERSTAND THAT ONCE RELEASED FOR PRODUCTION, ANY REVISION WILL RESULT IN ADDITIONAL CHARGES.

CUSTOM ITEMS ARE NON–RETURNABLE

STANDARD CHAIR INSTALLATION

(SECURE CHAIR IN BOTTOM DIMPLES ON THE CHANNELS)

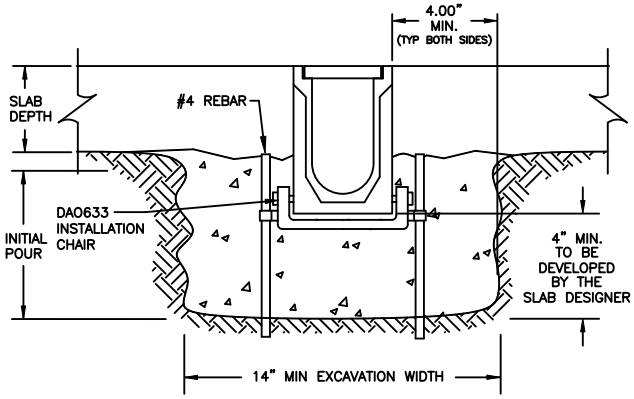

CHANNEL OUTLET DETAILS

(ALL END CAPS ARE TO BE SECURED WITH AN ADHESIVE)

END CAP OUTLET

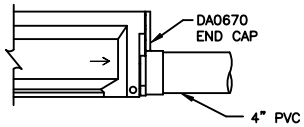

BOTTOM OUTLET

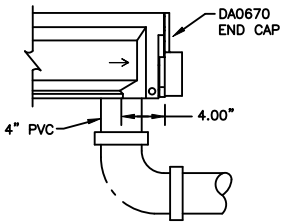

BOTTOM OUTLET W/"P" TRAP

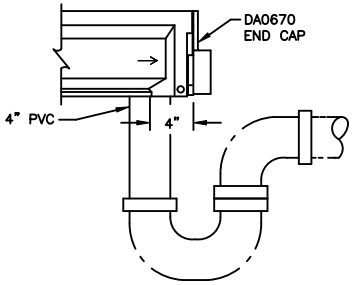

DISCLAIMER – THE CUSTOMER AND THE CUSTOMER'S ARCHITECTS, ENGINEERS, CONSULTANTS, AND OTHER PROFESSIONALS ARE COMPLETELY RESPONSIBLE FOR THE SELECTION INSTALLATION AND MAINTENANCE OF ANY PRODUCT PURCHASED FROM TRENCH DRAIN SYSTEMS AND/OR ITS MANUFACTURERS. TRENCH DRAIN SYSTEMS MAKES NO WARRANTY, EXPRESS OR IMPLIED, AS TO THE SUITABILITY, DESIGN, MERCHANTIBILITY, OR FITNESS OF THE PRODUCT FOR CUSTOMERS APPLICATION. THE DRAWING AND INFORMATION PROVIDED REMAIN THE PROPERTY AND COPYRIGHT OF THE MANUFACTURER LISTED. THE MANUFACTURER RESERVES THE RIGHT TO MODIFY SPECIFICATION WITHOUT NOTICE.

REV	DESCRIPTION	BY	DATE

TDS
TRENCH DRAIN SYSTEMS
PO BOX 377
FREMONT, OH 43420
610–638–1221

DRAWN: CJP
CHECKED:
DATE: 6.13.19

DESCRIPTION
POLYCAST 700
SYSTEM LENGTH; 4FT
DI FRAME – DG0669 GRATE

DWG. NO.
PCK7–DG0669–CF–04

DO NOT SCALE DRAWING | WEIGHT: 163# | SHEET 1 OF 1

PROPRIETARY AND CONFIDENTIAL; THE INFORMATION CONTAINED IN THIS DRAWING IS THE SOLE PROPERTY OF TDS. ANY REPRODUCTION IN PART OR WHOLE WITHOUT THE WRITTEN PERMISSION OF TDS IS PROHIBITED.