DL00019 Sink Mixer

Water pressure requirement:

Recommended 300kPa
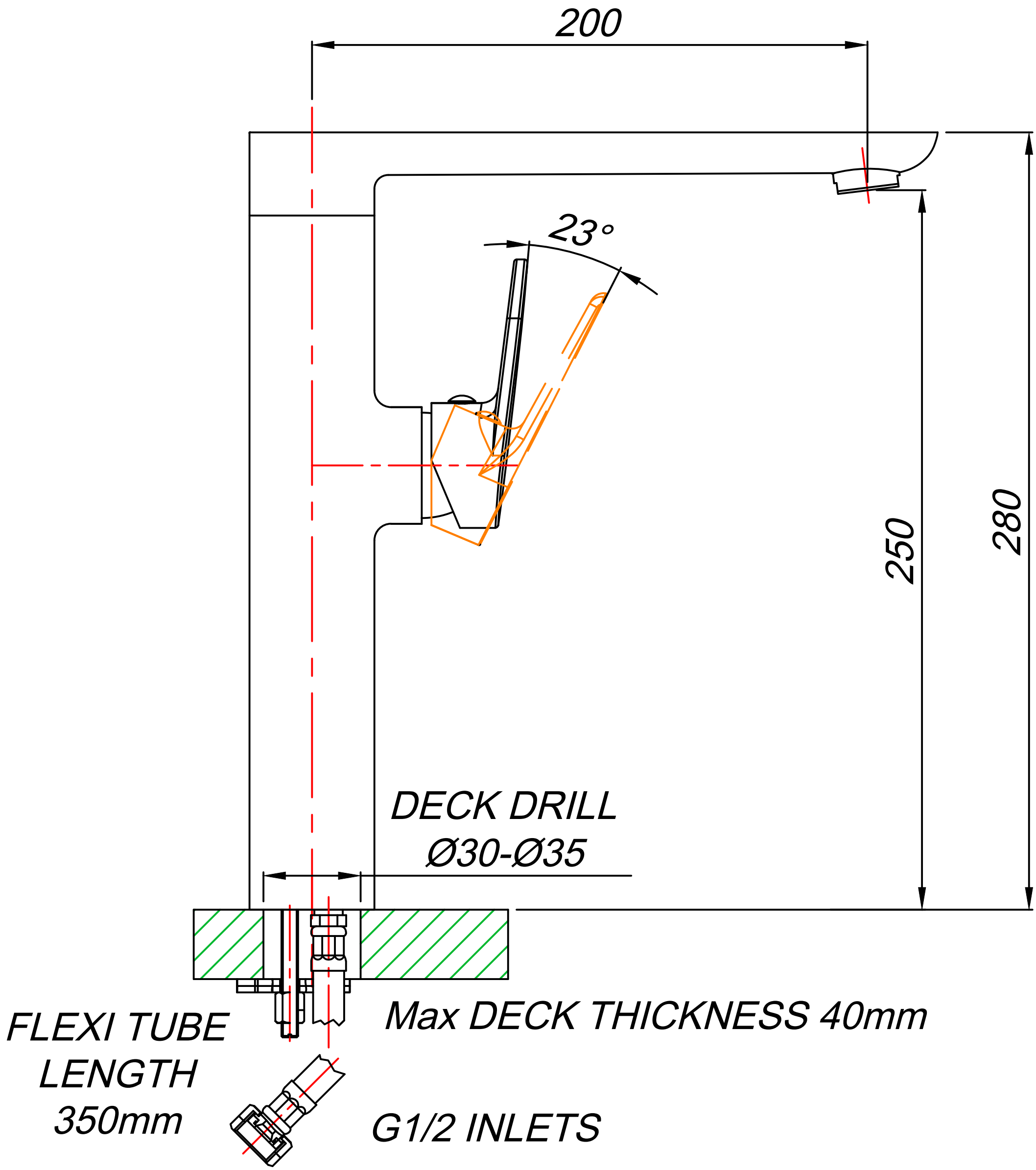
Balanced not exceeding 600 kPa