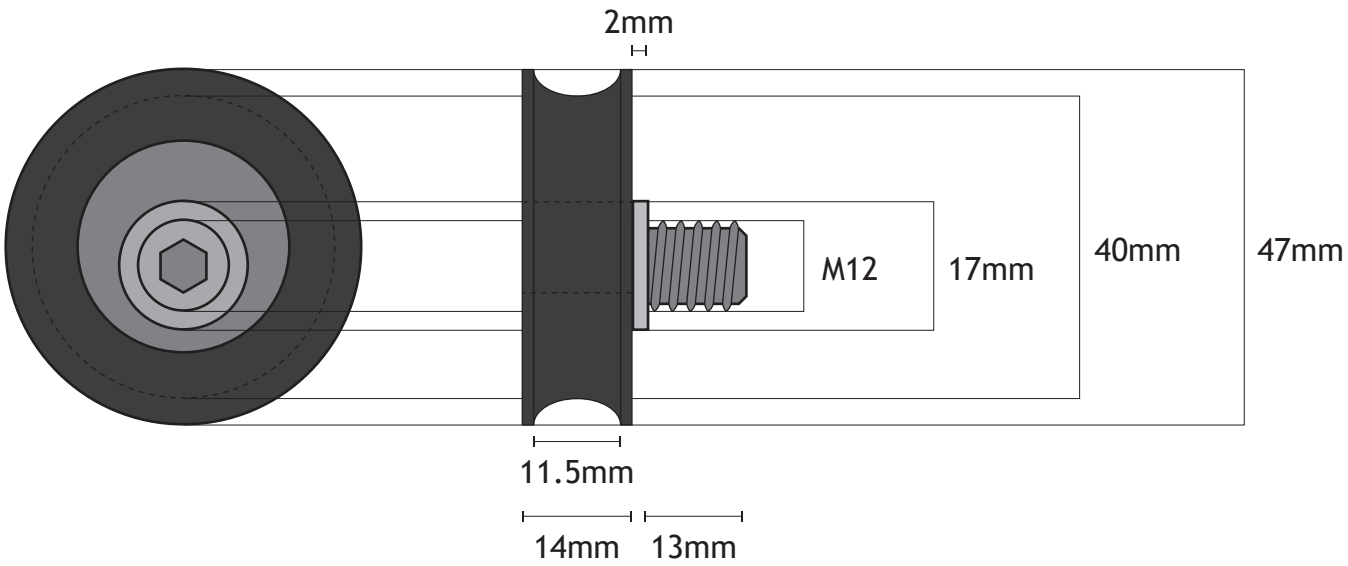

Nylon Kicking Roller with M12 Eccentric Pin (Curved Track)			Part Number **29928**
Date	14th February 2020	Reeley Limited Unit 14 Monkspath Business Park Highlands Road Solihull B90 4NY	reeley limited
Created by	M. Watkins		
Scale	1:1		