Find Help Online

Detailed video walkthrough:
output.com/sidecar-assembly

Platform 2.0

Assembly Guide

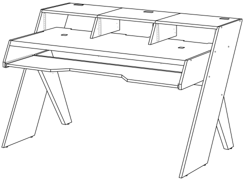

Hardware

1x

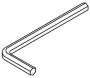

A 6x

B 20x

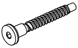

C 4x

D 6x

E 6x

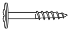

F 16x

G 6x

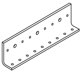

H 32x

I 32x

J 2x

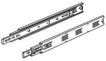

L 4x

Wood Pieces

M

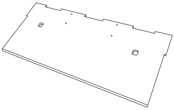

O

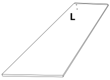

N

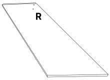

Y

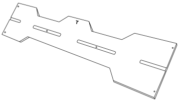

P

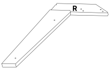

Q

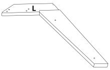

X

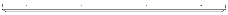

W

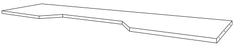

R

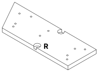

S

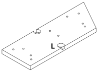

T,U,V

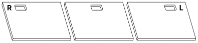

Z

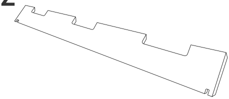

Tools (Not Provided)

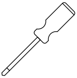

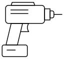

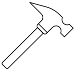

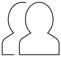

* : SUGGESTED

** : 2 PEOPLE SUGGESTED

Desk Assembly Steps

1

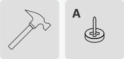

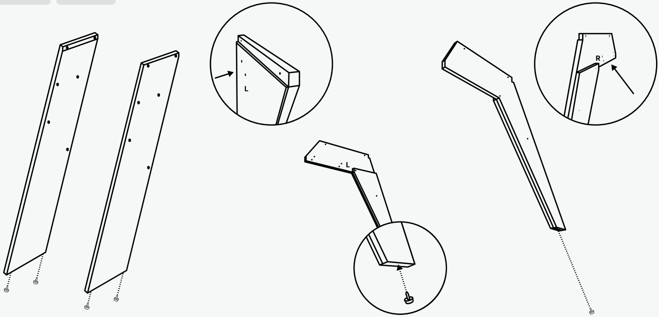

Hammer Parts **A** into the bottom of wood leg piece Parts **P**, **Q**, **N** & **O**. On parts **P** & **Q**, hammer in Parts **A** slightly off center.

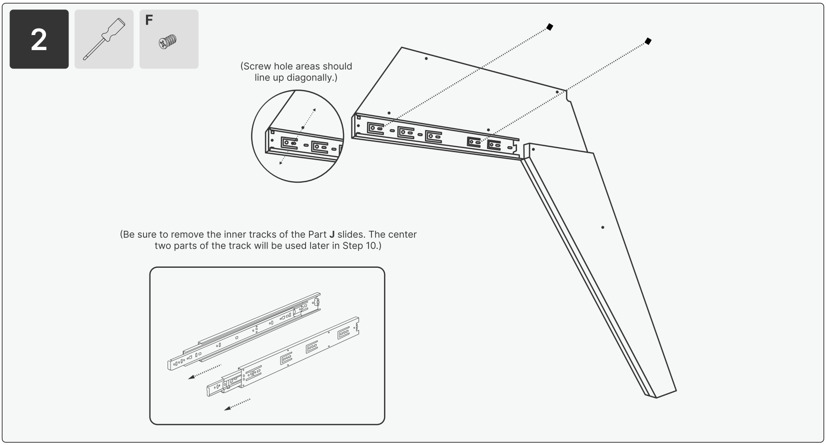

(Screw hole areas should line up diagonally.)

(Be sure to remove the inner tracks of the Part **J** slides. The center two parts of the track will be used later in Step 10.)

Separate the Part **J** Slides into two pieces by pulling them apart, and pushing on the tab in the middle.

Attach the wider part of the slides to wood Parts **P** & **Q** using the Part **K** screws.

The back of the slides have a bumper on them, and should be facing the longer side of Parts **P** & **Q**.

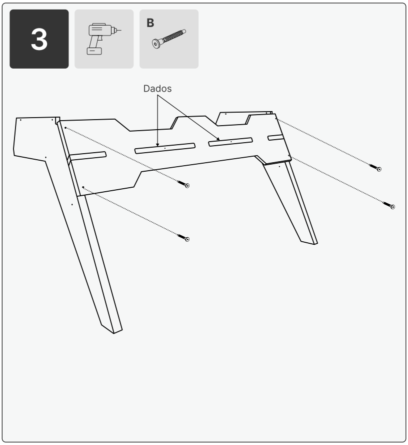

Attach wood Part **Y** to the back of wood Parts **P** & **Q** using the Part **B** screws.

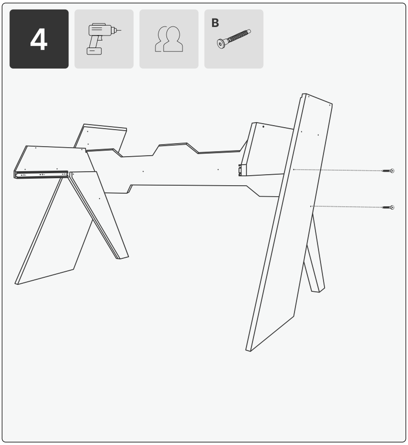

Attach wood Parts **N** & **O** to the assembly made in the previous step. Parts **N** & **O** attach to Parts **P** & **Q** using the Part **B** screws.

The dados in Part **Y** should be facing the back of the desk, which is also the side that the Part **B** screw heads will be exposed on.

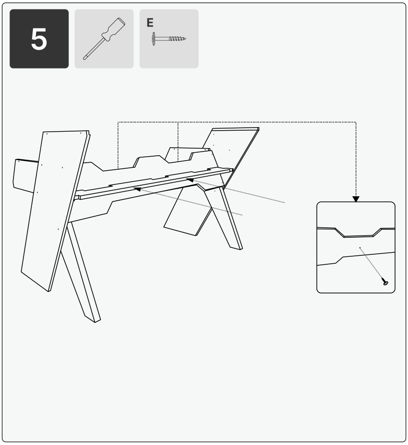

Attach wood Part **Z** to the assembly from the previous step using the Part **E** screws.

Part **Z** will slide into the dados in wood Parts **P** & **Q** and dados in the back of Part **Y**.

Wood Part **Z** is held in place with two Part **E** screws through wood Part **Y** into the angled side of Part **Z**.

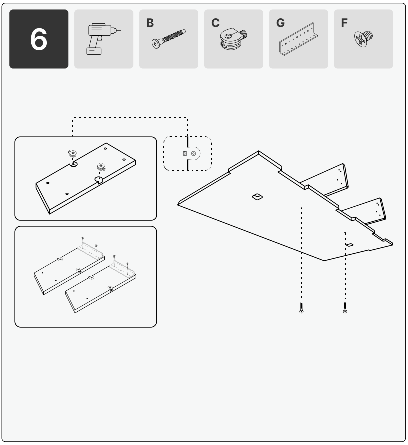

Place Part **C** into wood parts **R** & **S**.

Orient Parts **R** & **S** in the desired fashion (slant or perpendicular edge forward), and attach them to the desktop by screwing in Part **B** screws through the bottom of Part **M**.

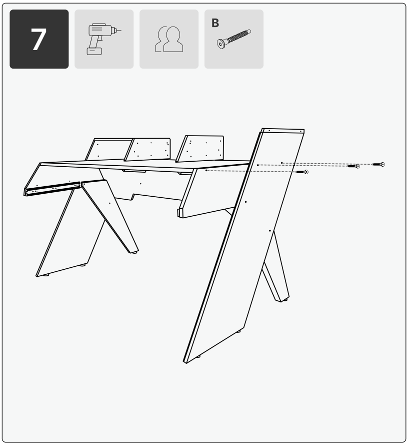

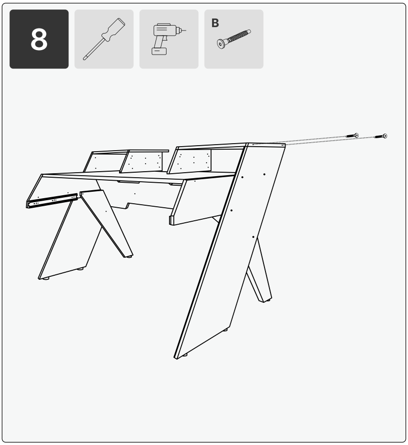

Place wood Part **M** (with Parts **R** & **S** attached) on top of the large assembly made previously (also in between the front of Parts **P** & **Q**) and line up the holes.

Because the legs will not be perfectly aligned, it may take a bit of force to get the desktop aligned properly.

Once aligned, screw in the six Part **B** screws, three on each side (two through legs into the sides of Part **M**, and one up front).

Place parts **T** & **V** onto their appropriate sides and line up the holes with the holes on the sides of Parts **N** & **O**, as well as their bottom holes to match with the exposed threads of Part **C** that were installed in the wood Parts **R** & **S**.

Screw in the sides with Part **B** screws.

While pressing down hard on Parts **T** & **V** to make sure all wood parts are flush, tighten Part C with a philips head screwdriver to lock them in place.

9

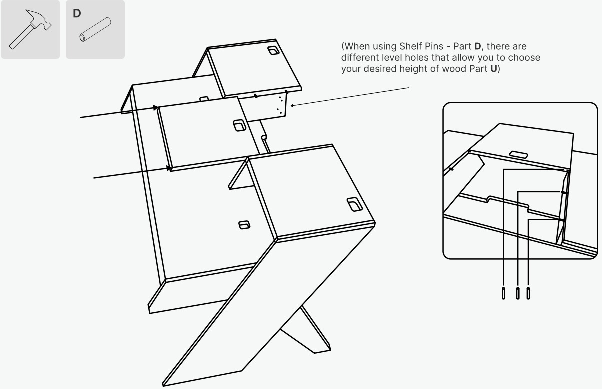

(When using Shelf Pins - Part **D**, there are different level holes that allow you to choose your desired height of wood Part **U**)

(Slide the center piece Part **U** in from the front of the desk)

Determine the desired level of wood Part **U** in the middle of the desk, and place the Part **D** shelf pins in the corresponding holes.

Slide Part **U** over the Part **D** shelf pins.

10

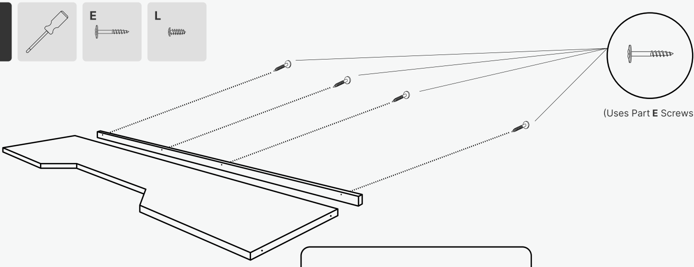

(Uses Part **E** Screws)

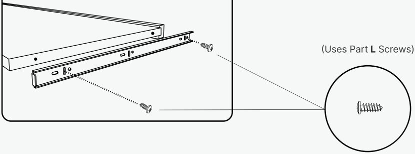

Attach wood Part **X** to the back of wood Part **W** using the Part **E** screws.

Attach the smaller part of the Part **J** slides to the sides of Part **W** using the Part **L** screws.

Slide the just completed keyboard tray assembly into the desk assembly.

Done

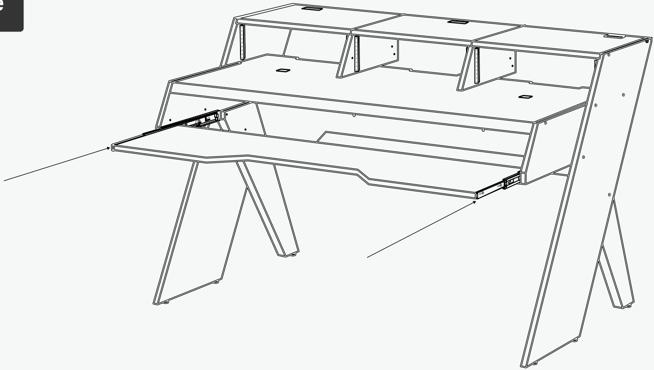

(Line up the desk tray tracks and slide in the Platform keyboard tray to complete your finished desk)