QUBI COMPACT SHOWER SET

WELS: 3 Star 9L/min
WELS Reg No: S14373
Pressure Rating: Min 150KPa - Max 500KPa
Temperature Rating: Min 1°C - Max 75°C

WATER RATING www.waterrating.gov.au 9.0 litres per minute

WaterMark AS/NZS 3662 WMKT25262

Chrome **TP 1019**
Brushed Nickel **TP 1019BN**
Brushed Brass **TP 1019BB**
Matt Black **TP 1019BK**

SPECIFICATIONS

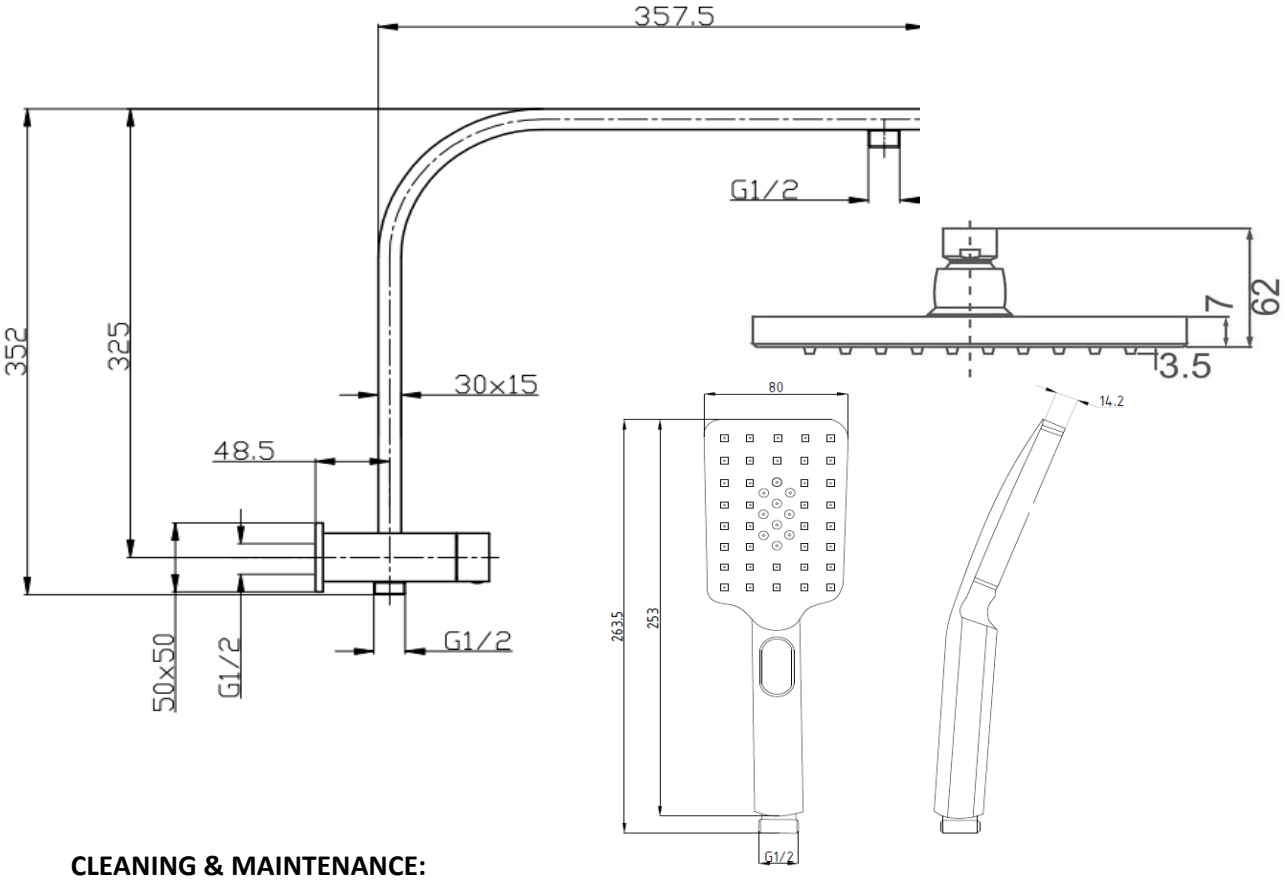

CLEANING & MAINTENANCE:
Shower Rails should be cleaned with mild detergent and water
All Products must be cleaned with a soft cloth with soapy water, avoid waxes, solvents, abrasives, acids and other chemical based cleaners
Warranty will be void if damages are caused by unsuitable cleaning products

WARRANTY INFORMATION:
Chrome Finish has a 5 year replacement warranty
All other finishes have a 2 year replacement warranty
All products have a full 1 year in house labour warranty from date of purchase

ect global kitchen & bathroomware

ADDRESS: 42 Castro Way, Derrimut VIC 3026
PHONE: (03) 8390 6300
OFFICE: ect_sales@outlook.com
SERVICE: ect_service@outlook.com
WEBSITE: www.ectglobal.com.au