STL–14 Light Duty Steel Shore with Patented Roller Bearing Nut and Safety Lock Set Screw.

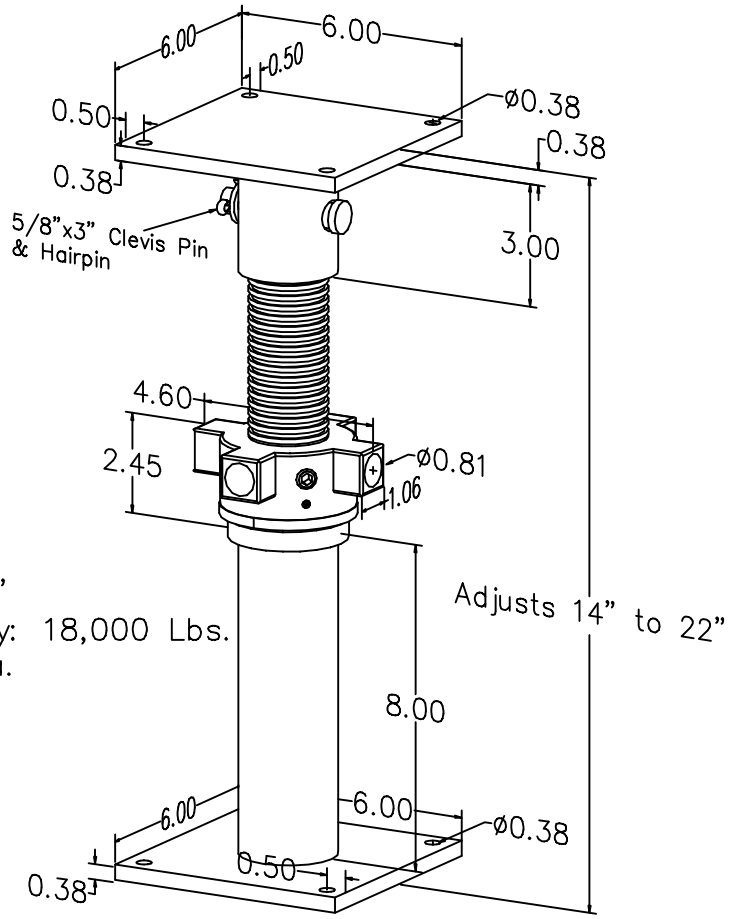

Item# STL–14
Adjusts 14" to 22"
Safe Load Capacity: 18,000 Lbs.
Weight: 18 Lbs. Ea.
MADE IN USA

Use Turning Bar as lever for height adjustment (Item # MJ–TB12, MJ–TB24, MJ–TB36).

DO NOT EXCEED SAFE LOAD CAPACITY.

©2019 ELLIS MANUFACTURING CO., INC.