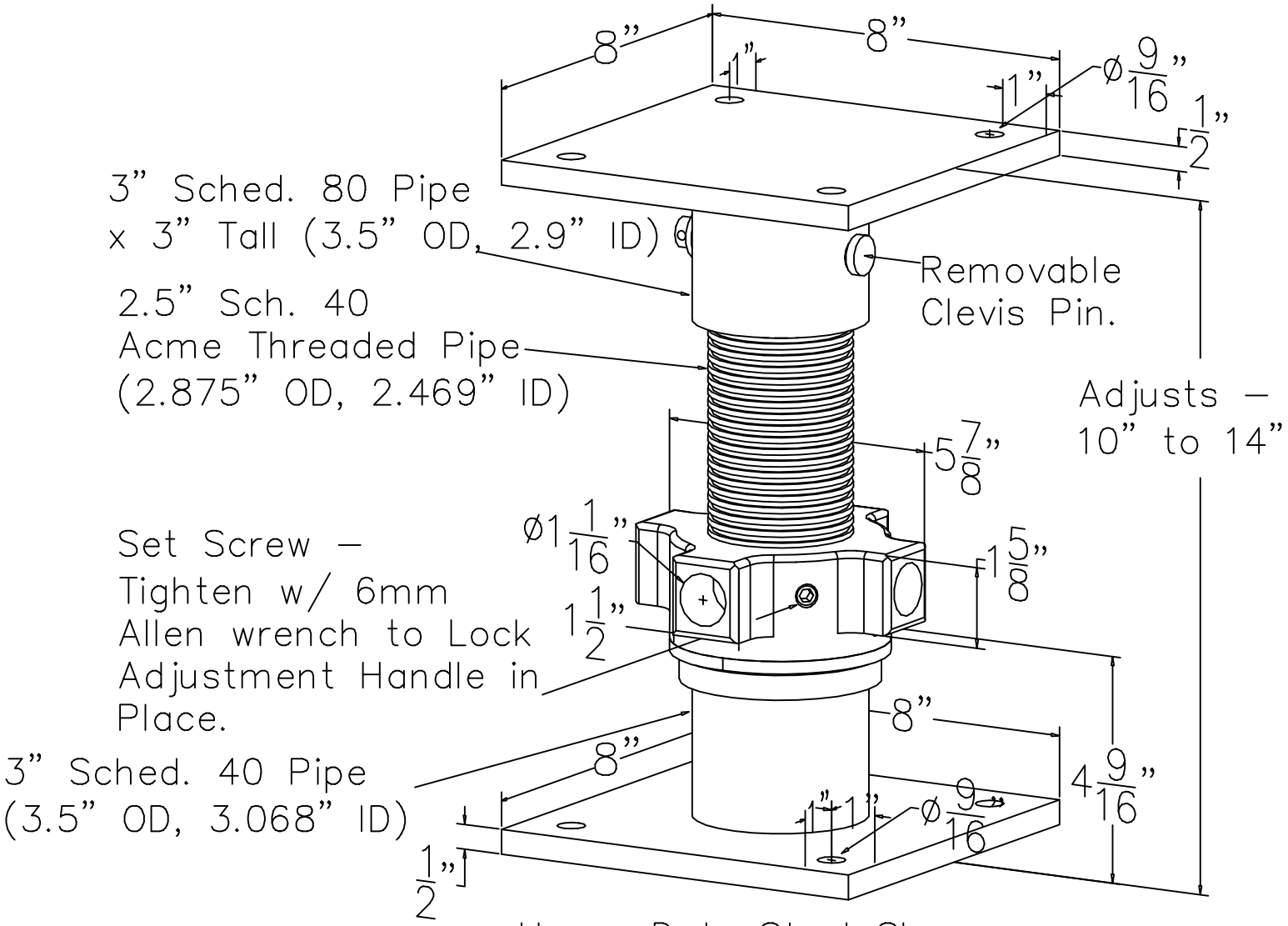

Heavy Duty Steel Shore
STL–10HD
Adjusts 4” (10” to 14”)
Tighten Set Screw w/ 6mm Allen
Wrench to Lock Handle in place.
56,000 Lb. Load Capacity
34 Lbs.