Ellis Manufacturing Co., Inc.
Newell Leading Edge Protection Guardrail

Item #: LER-1
Weight: 18 Lbs.

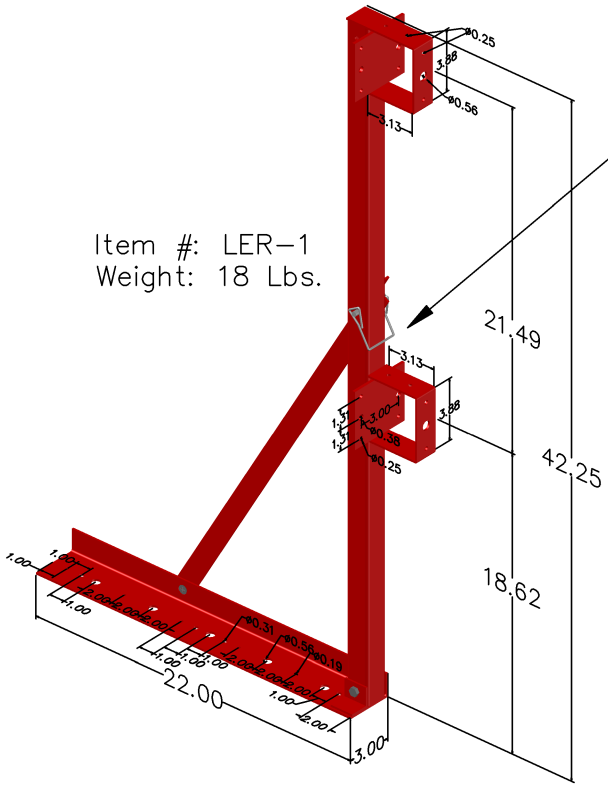

Erect Protection Rail

Remove Pin to transform Protection Rail from Erect to Collapsed Position for easy Storage.

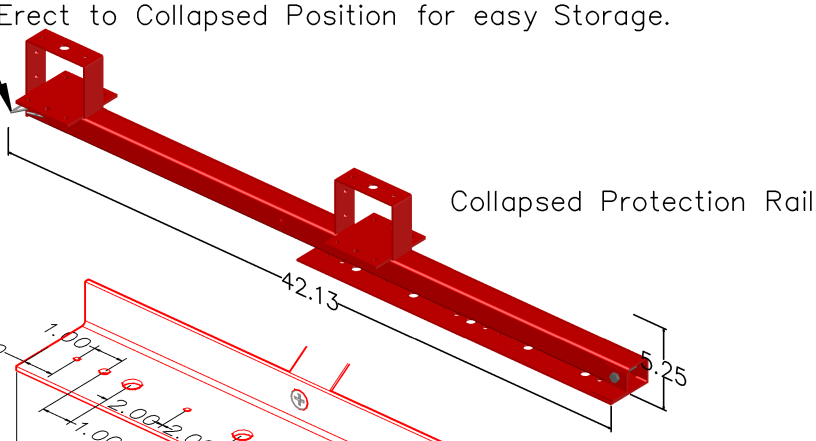

Collapsed Protection Rail

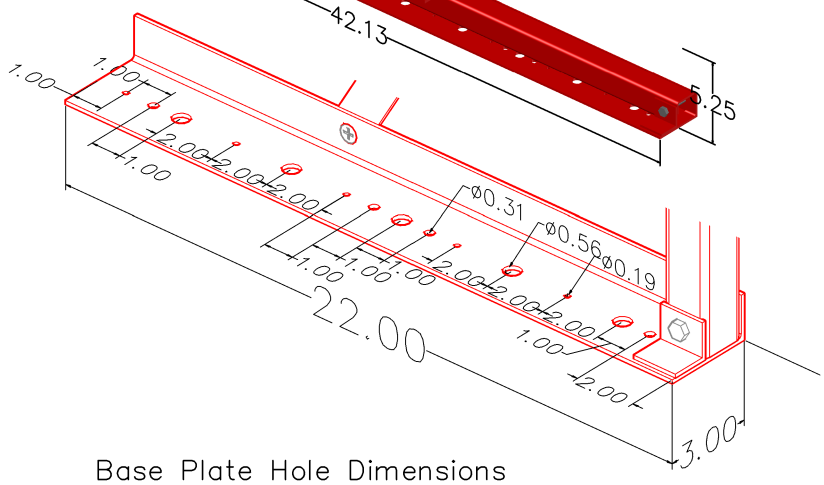

Base Plate Hole Dimensions

Erection and Dismantling of Protection Rail

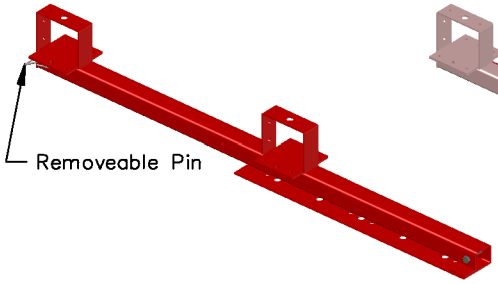

Remove pin of Collapsed Protection Rail

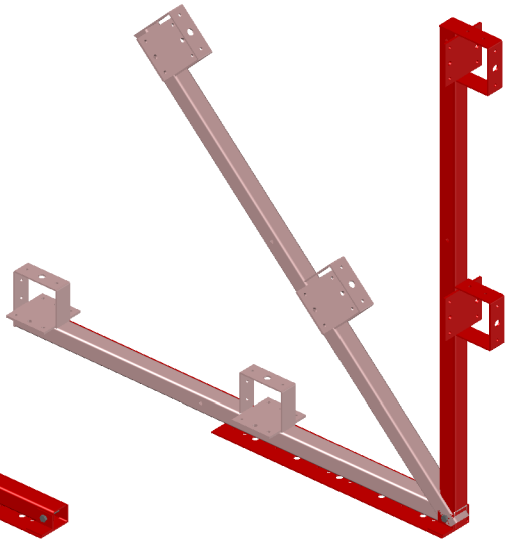

Raise rail into vertical position.

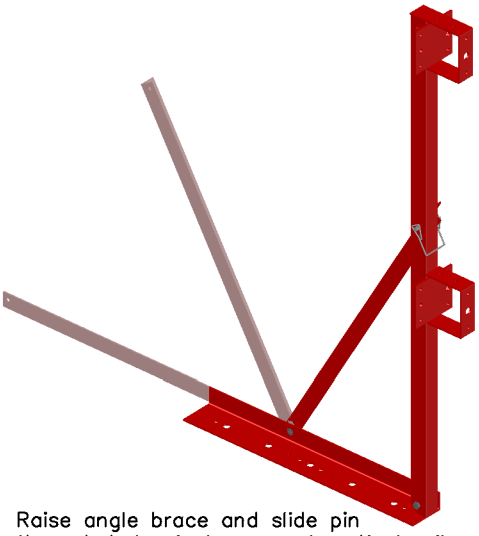

Raise angle brace and slide pin through holes in brace and vertical rail.

*This product requires fastening to wood or concrete surfaces with proper screws, bolts, nails etc. allowing the guardrail system to withstand, without failure, a force of at least 200 lbs applied within 2 inches of the top edge. Consult with certified engineer for approval of this product before construction begins.

Ellis MANUFACTURING COMPANY INC.

© 2019 Ellis Manufacturing Company Inc. All Rights Reserved