Ellis 12" Parapet Guardrail
Adjustable Rail Brackets – 3" Increments
Fits Parapet Walls 4" to 12"
Item #: GRS–P12
Weight: 23 Lbs

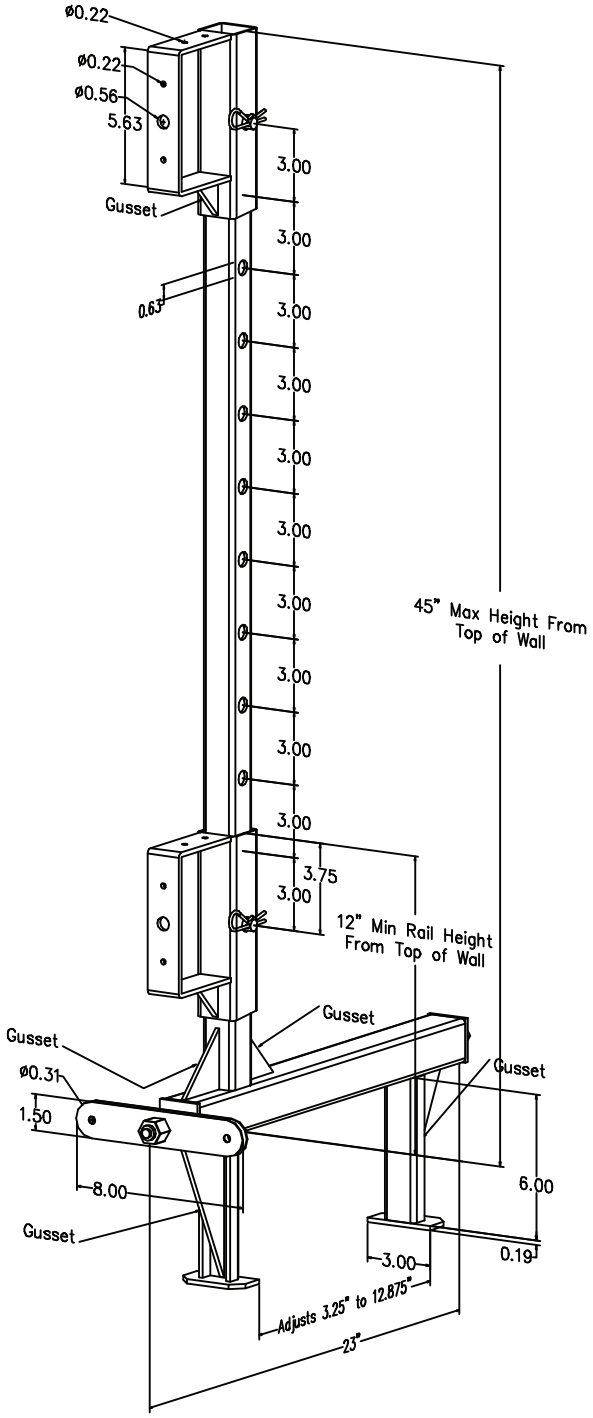

© 2016 Ellis Manufacturing Company Inc. All Rights Reserved