102 PCS 6+ M38 - B0587A

**WARNING:**
CHOKING HAZARD-small parts.
Not for children under 3 years.

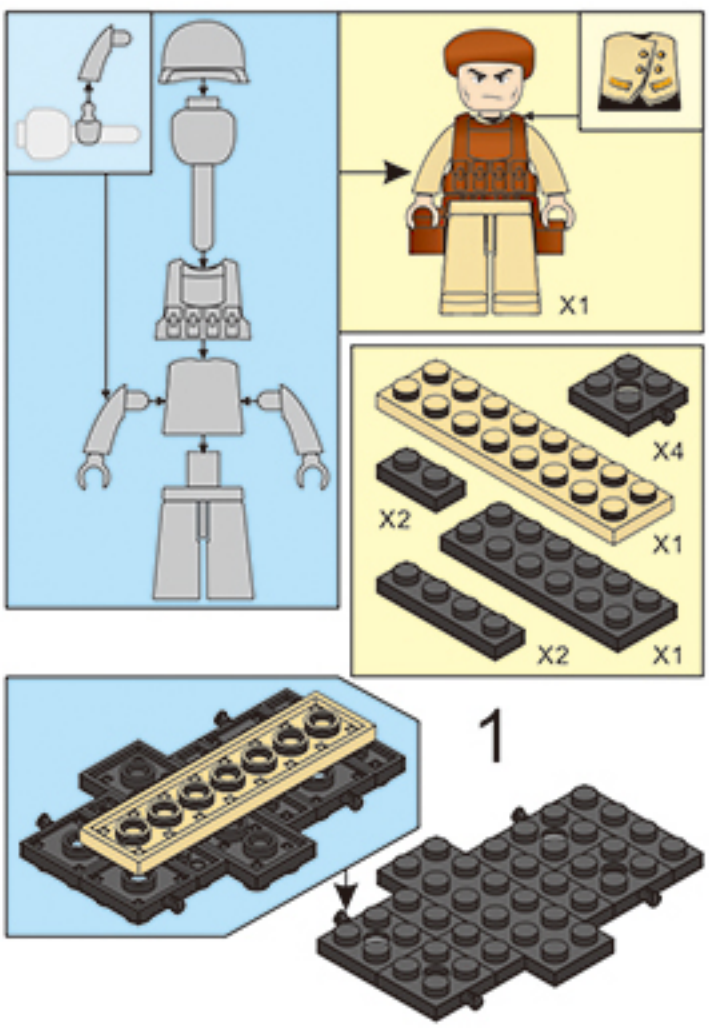


COLOUR

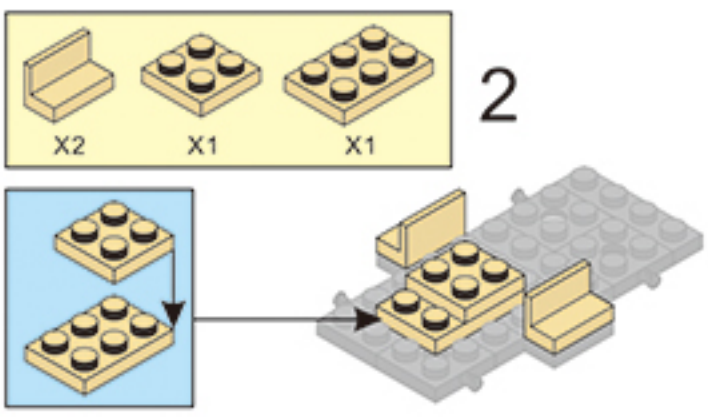


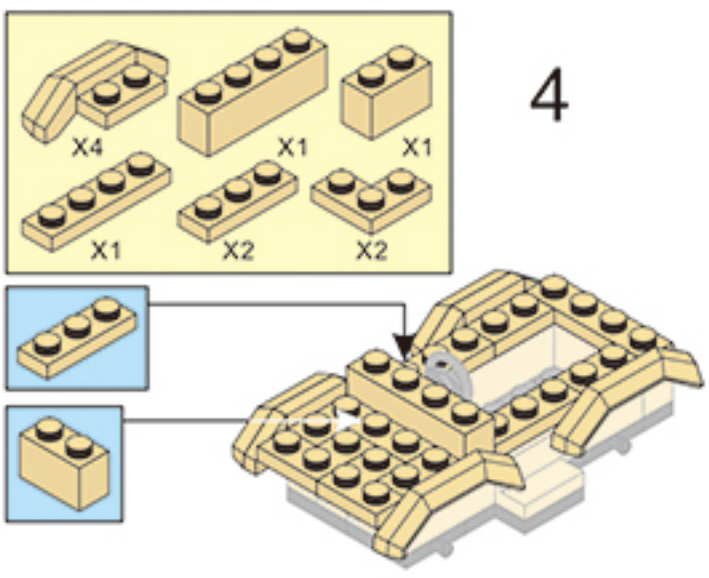


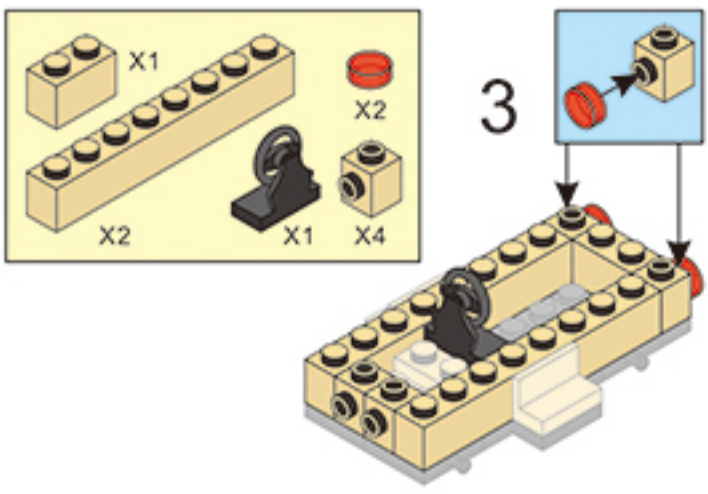


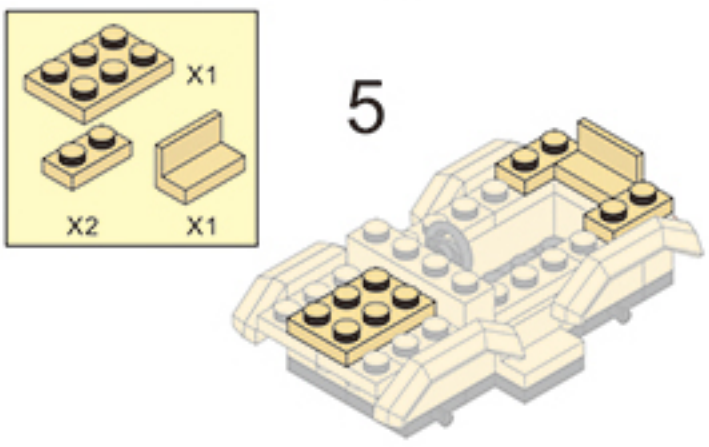


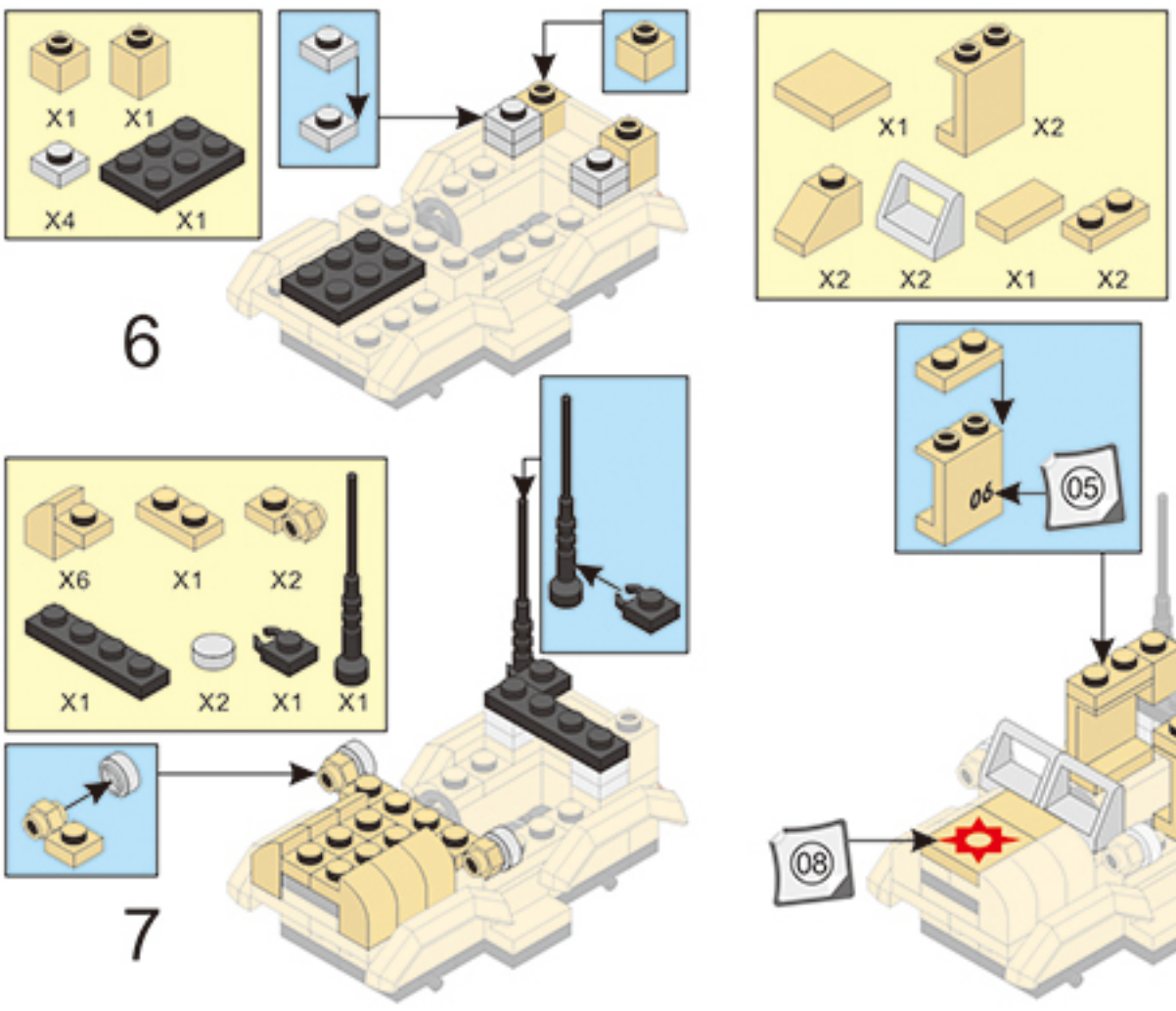


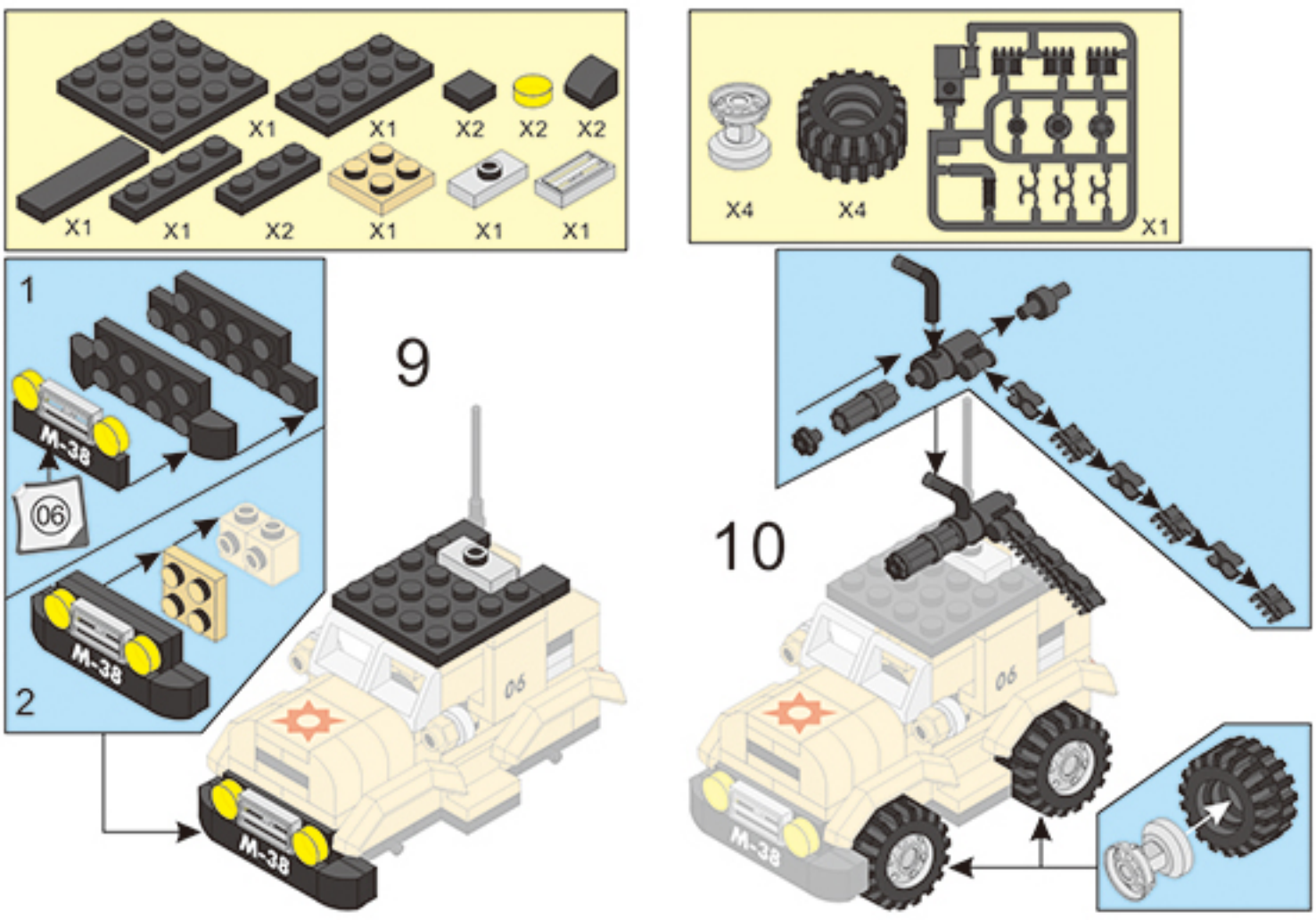

158 PCS 6+ M38 - B0587B

**WARNING:**
CHOKING HAZARD-small parts.
Not for children under 3 years.

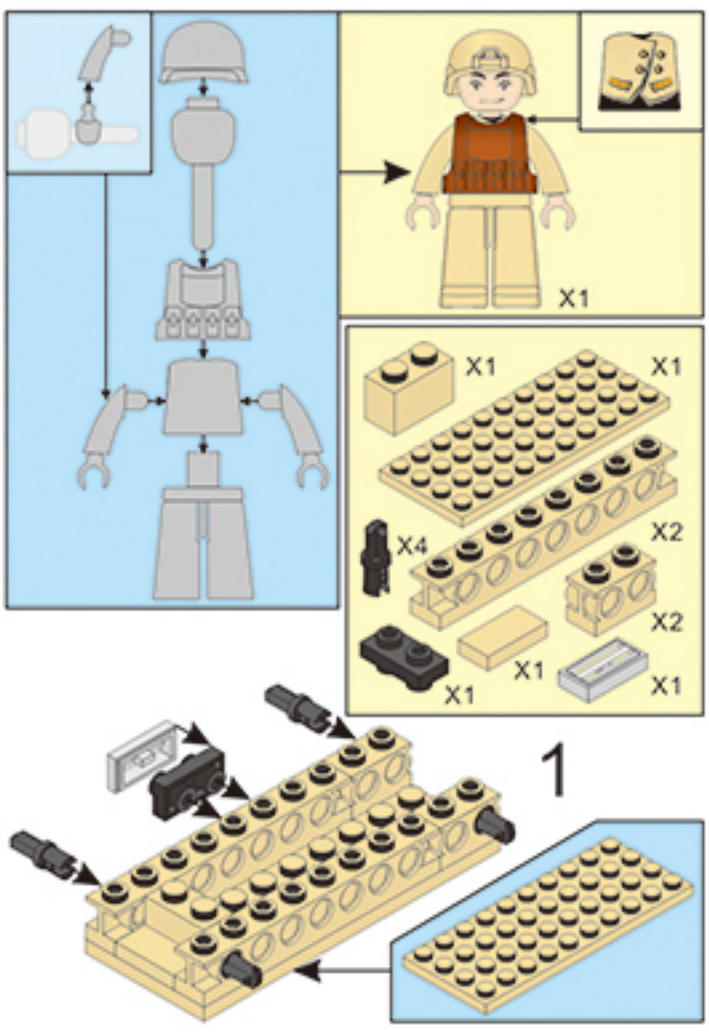

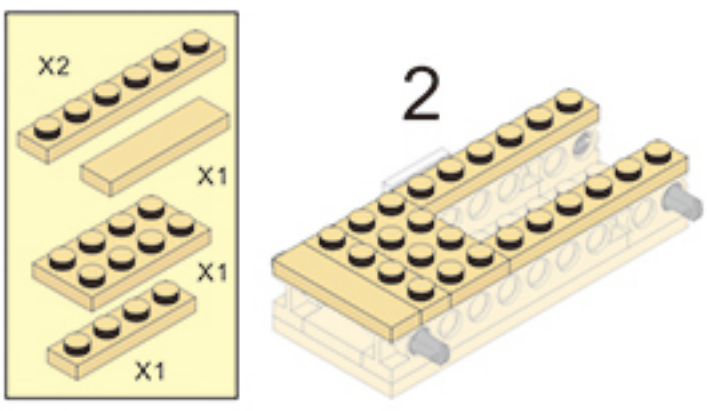


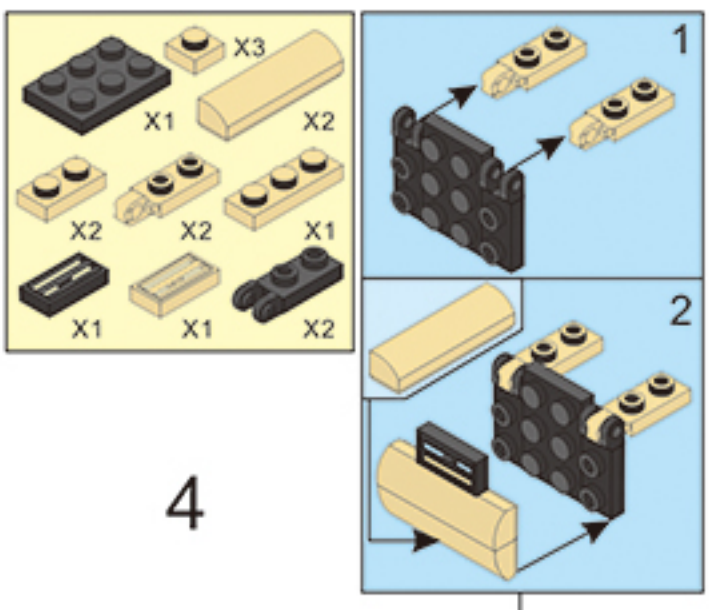


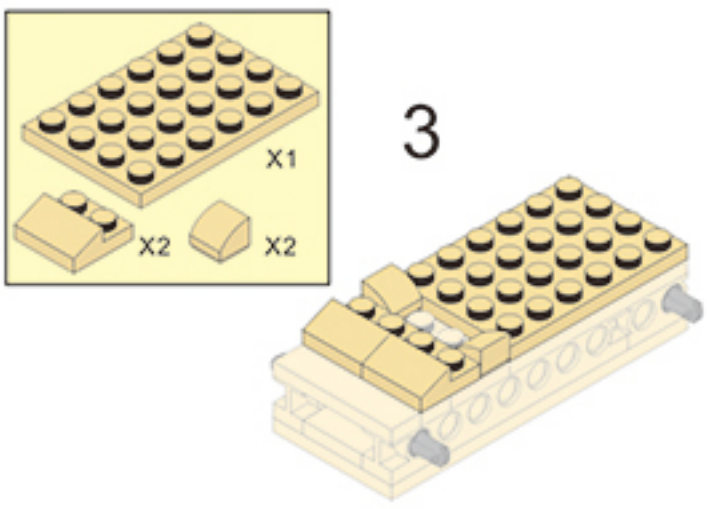


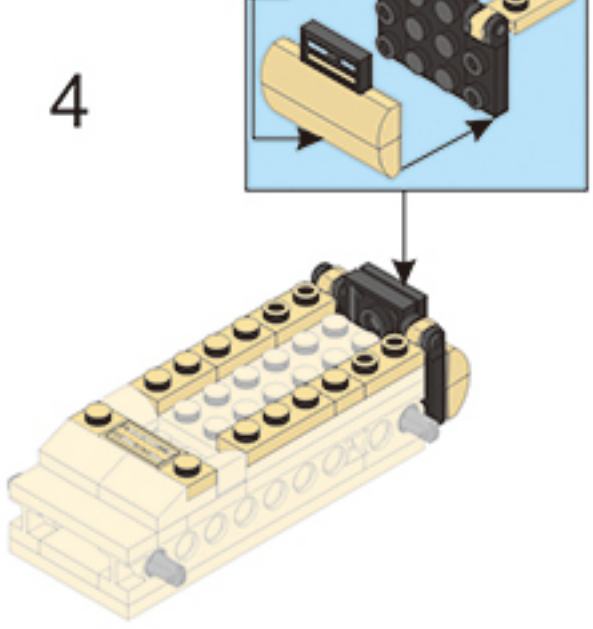


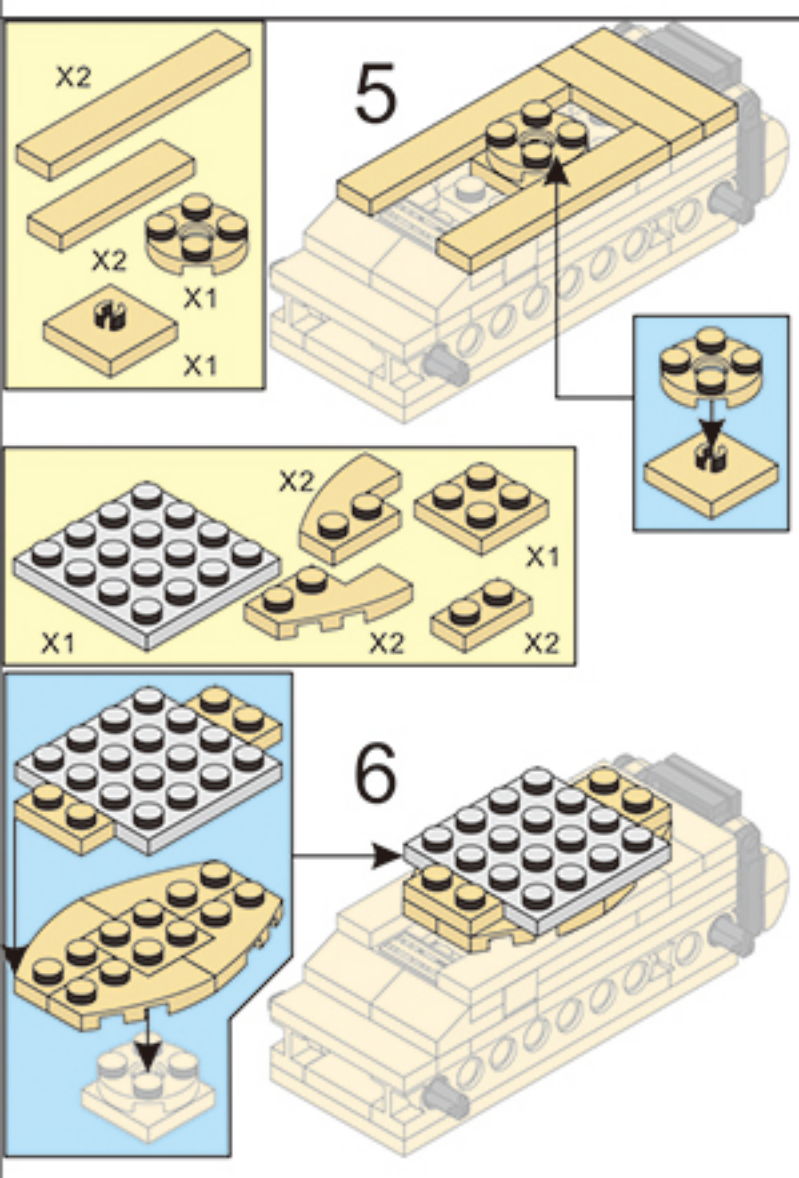


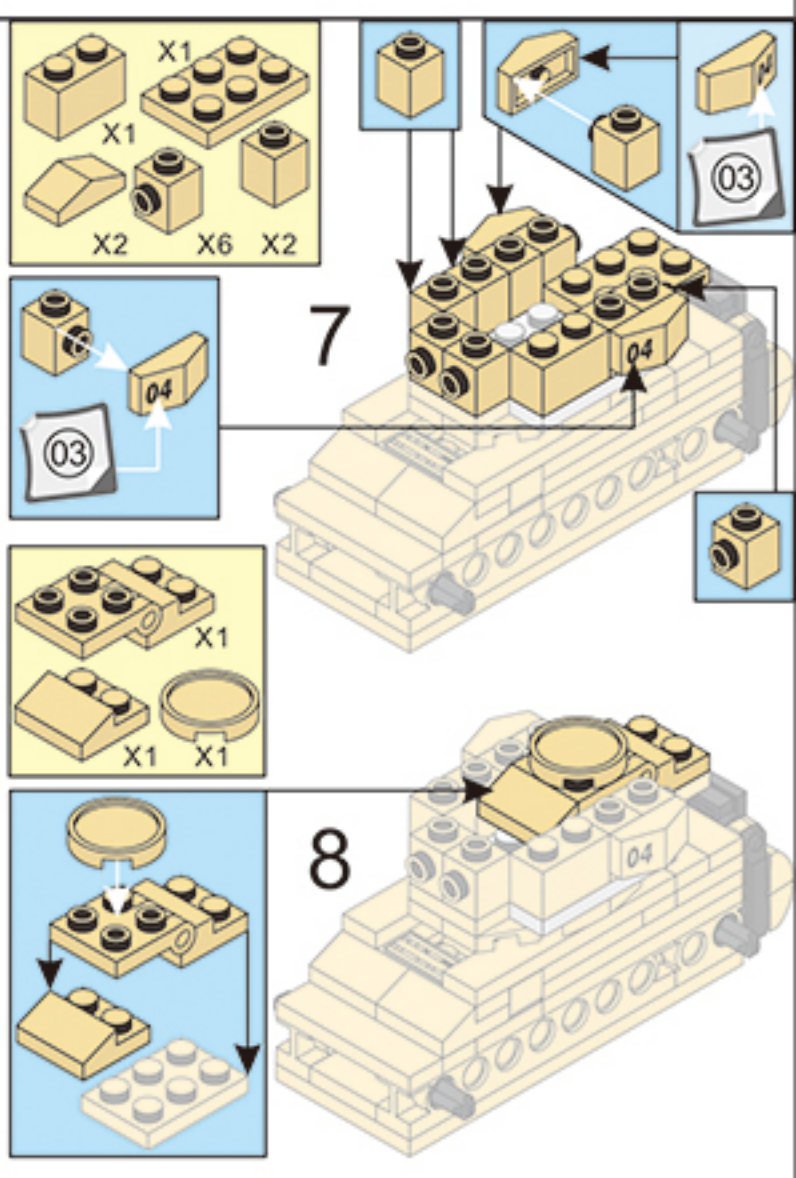


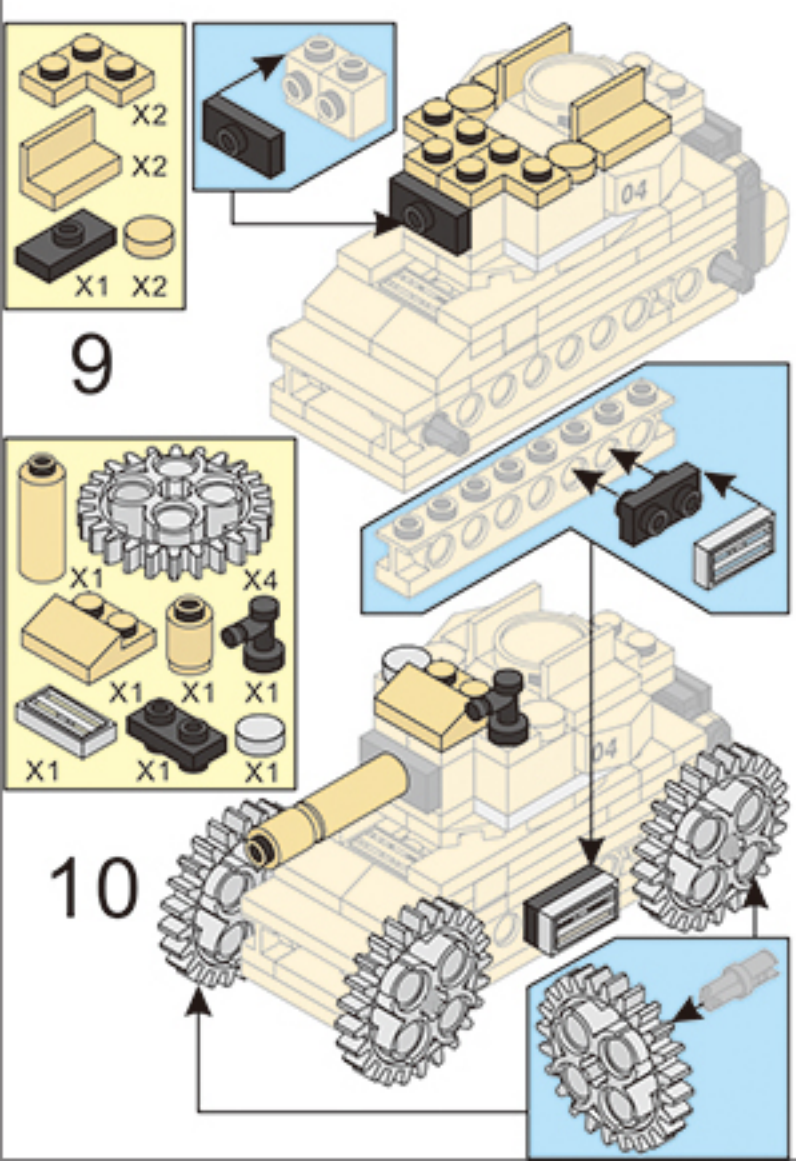


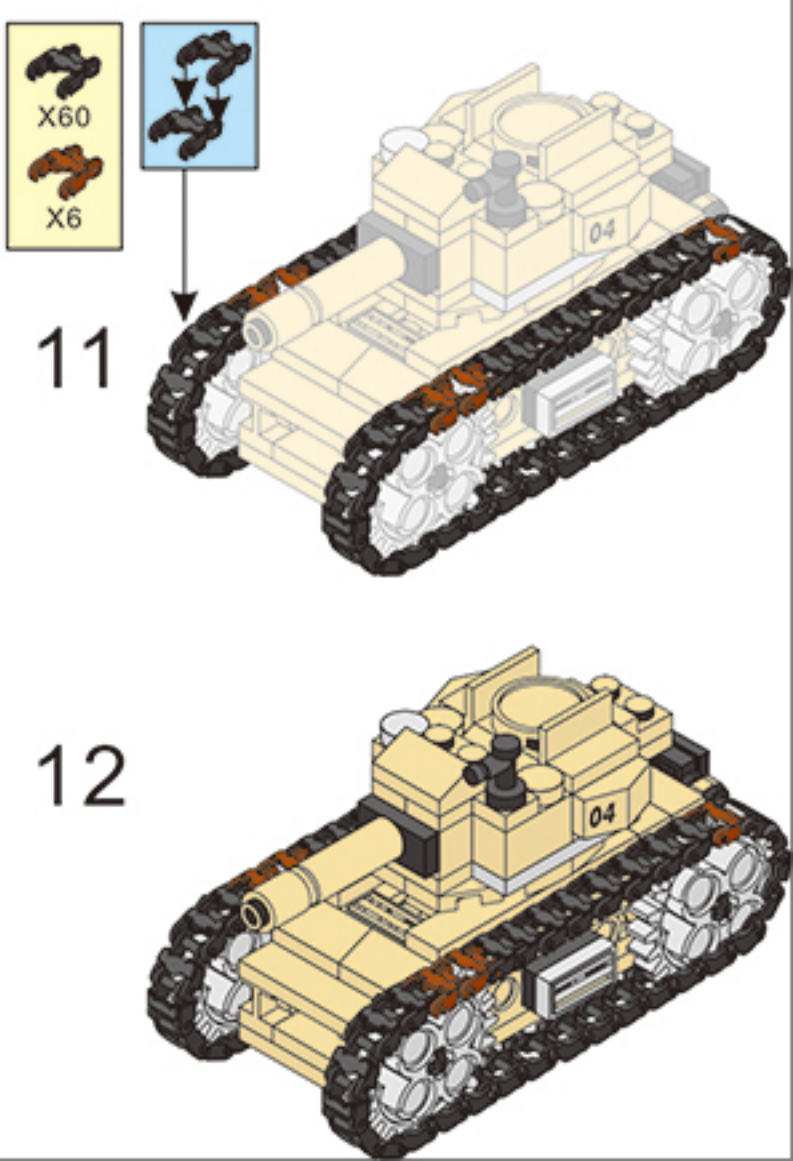

151 PCS 6+ M38 - B0587C

**WARNING:**
CHOKING HAZARD-small parts.
Not for children under 3 years.

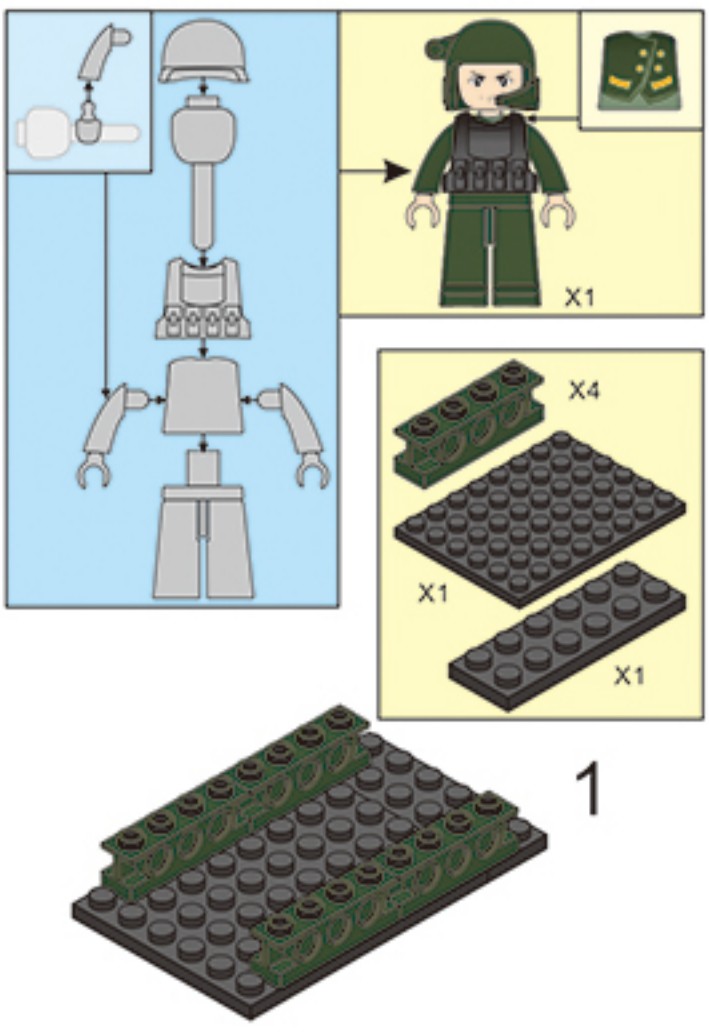


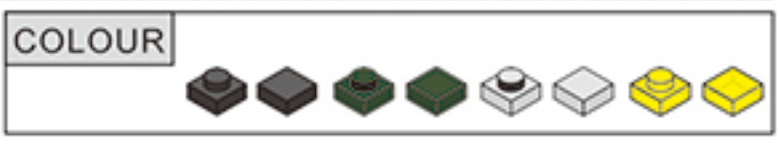


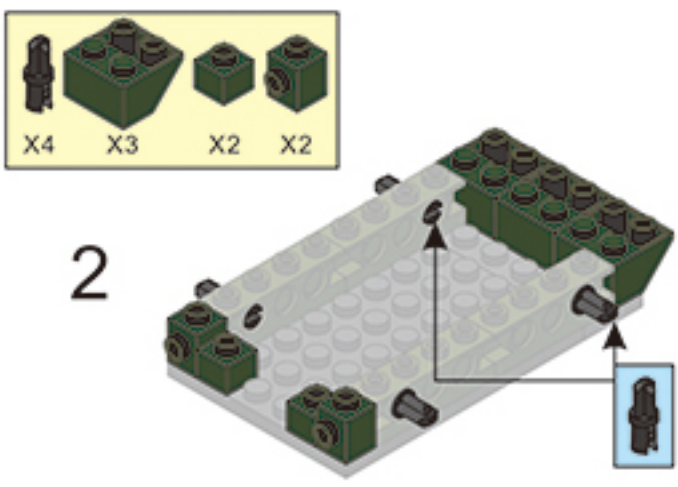


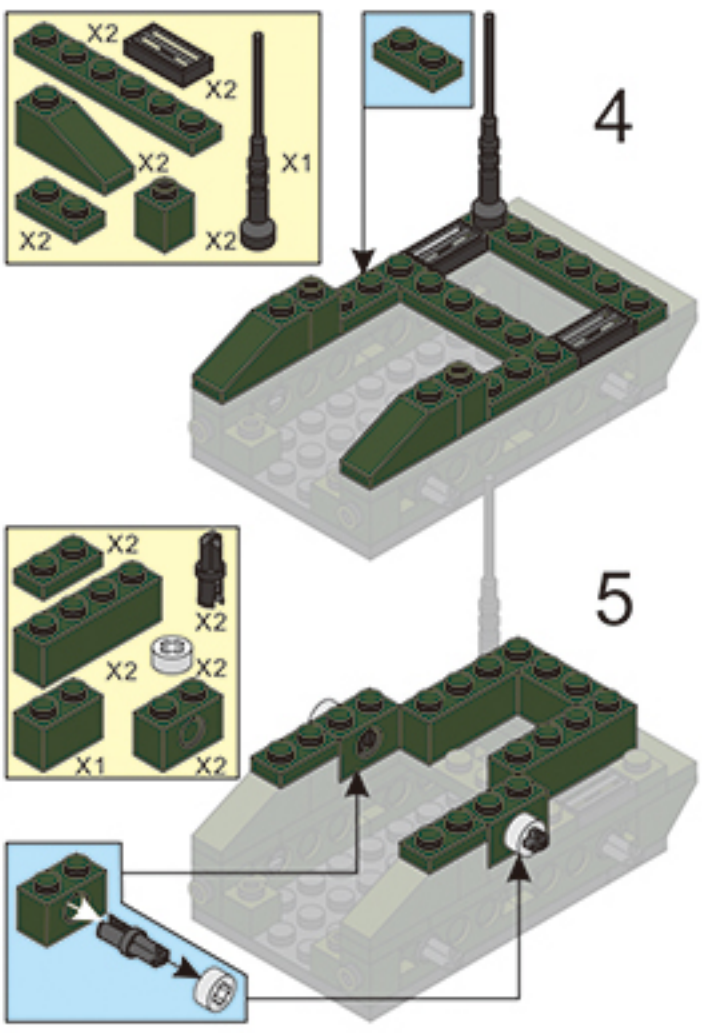


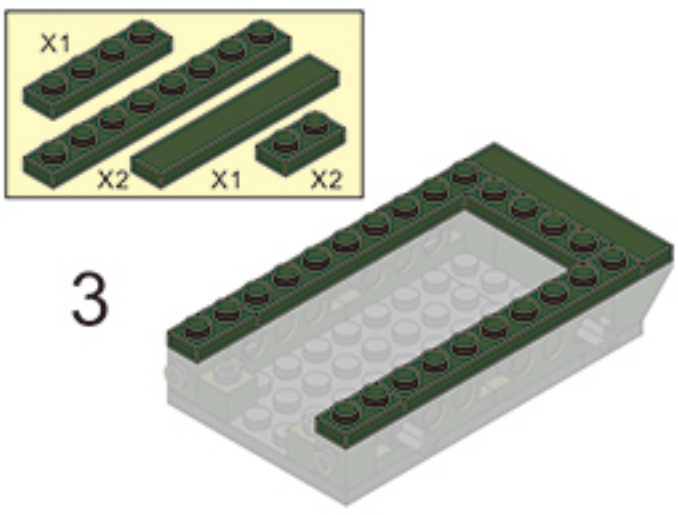


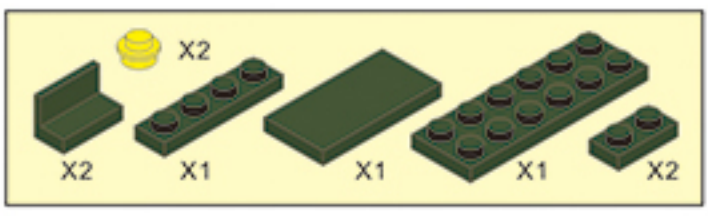


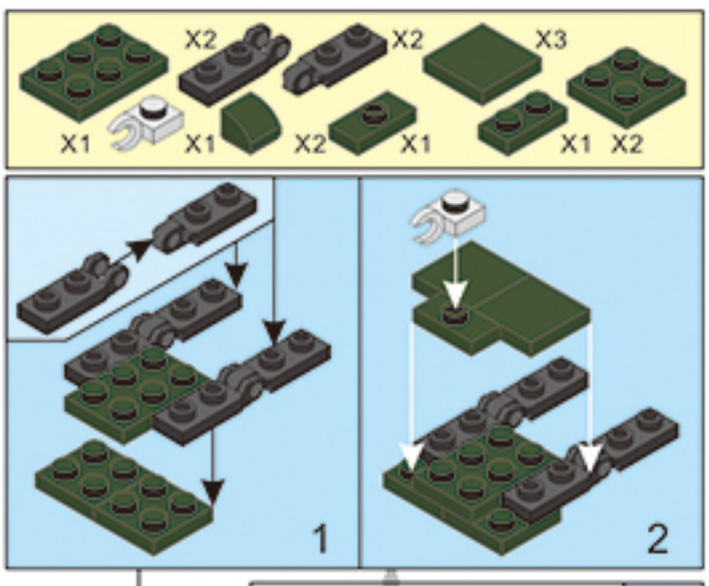


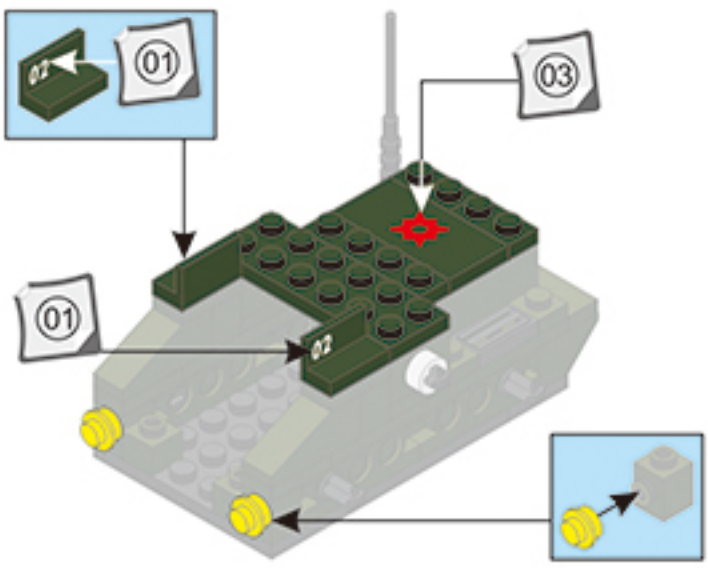


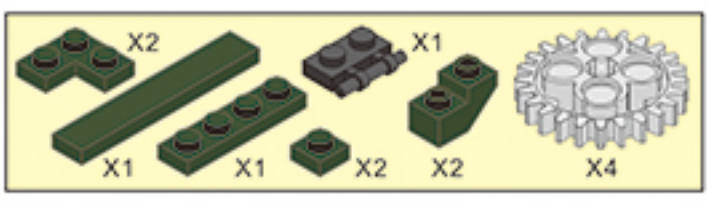





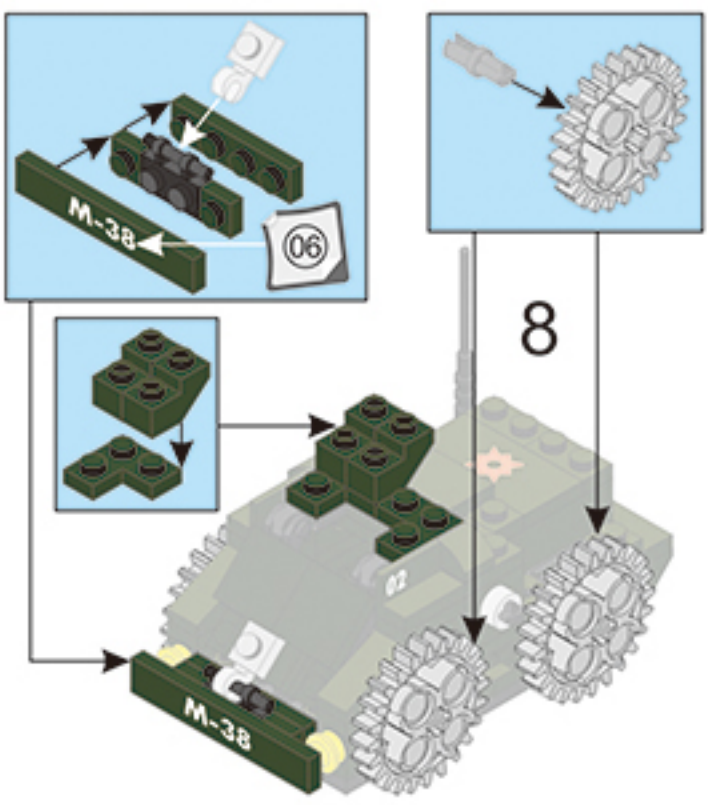


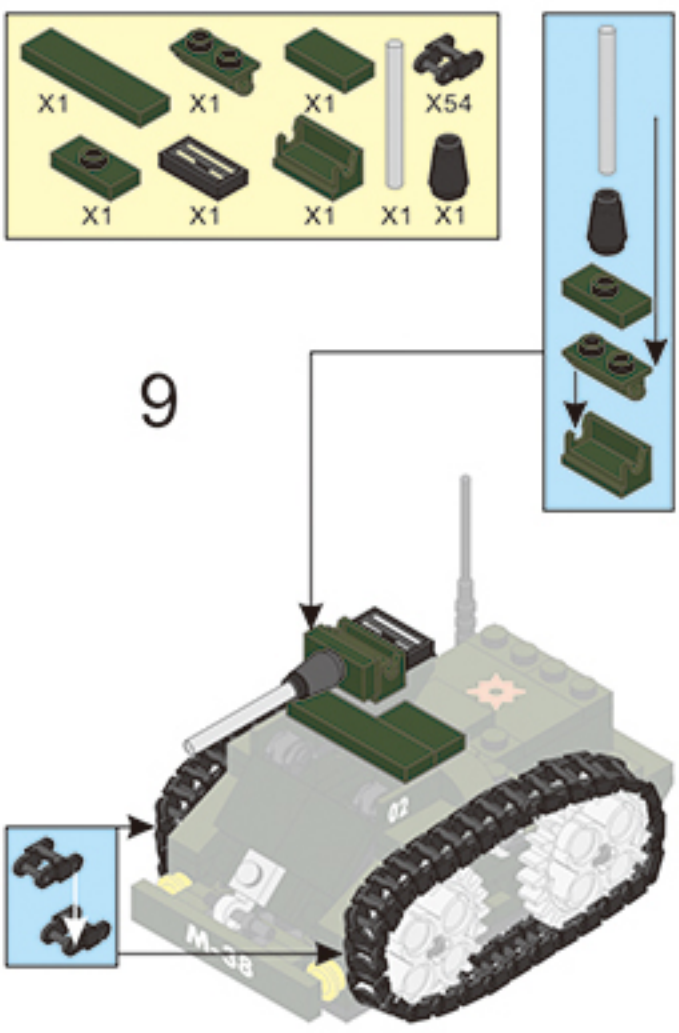

174 PCS 6+ M38 - B0587D

**WARNING:**
CHOKING HAZARD-small parts.
Not for children under 3 years.

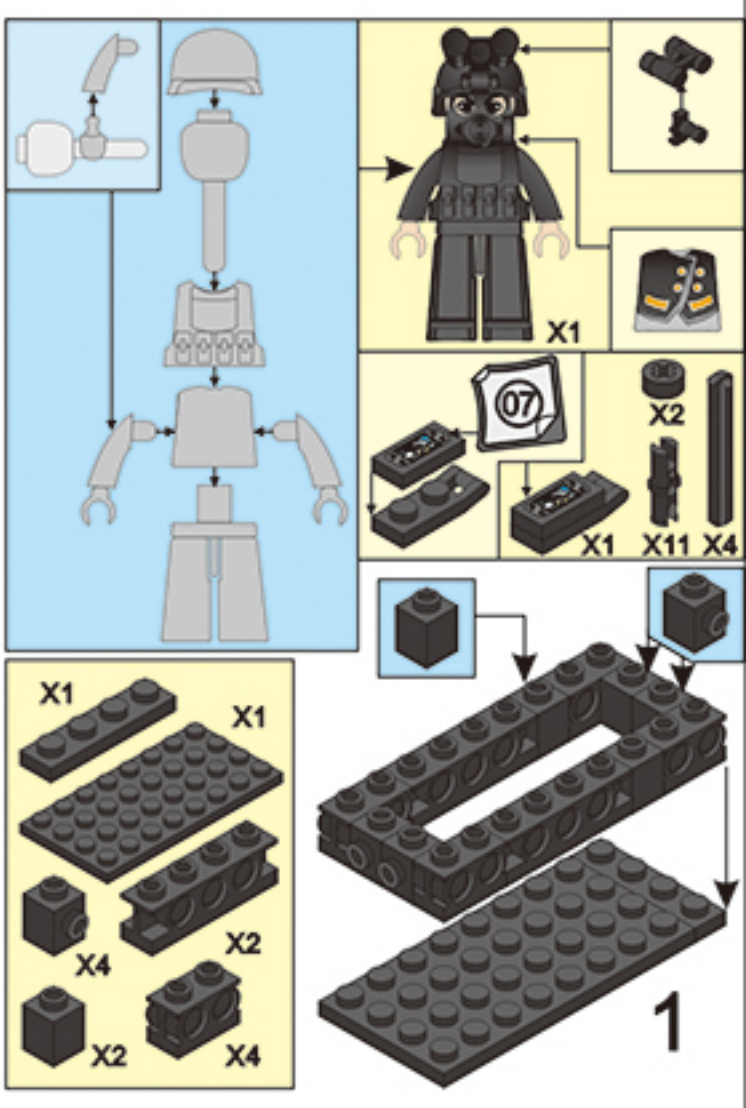

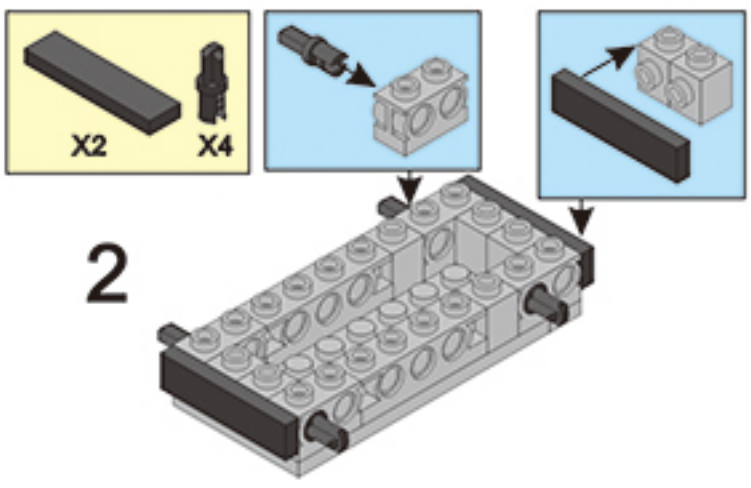


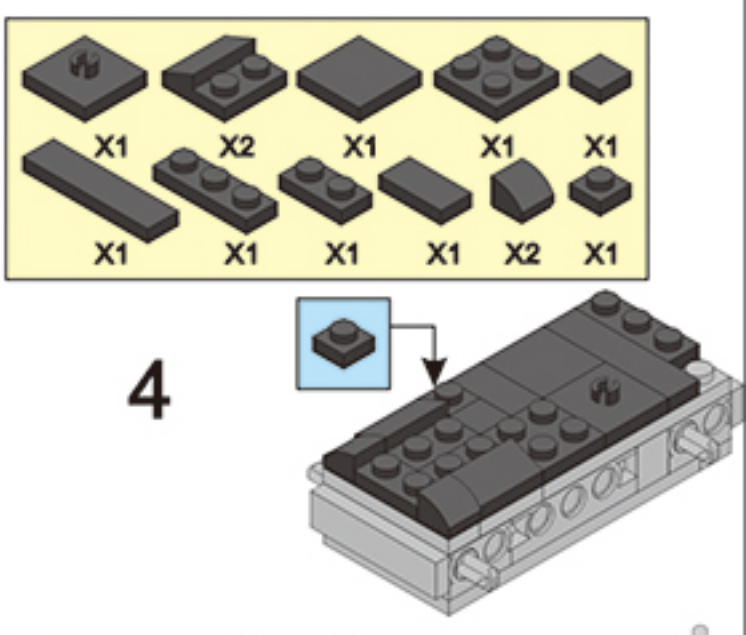


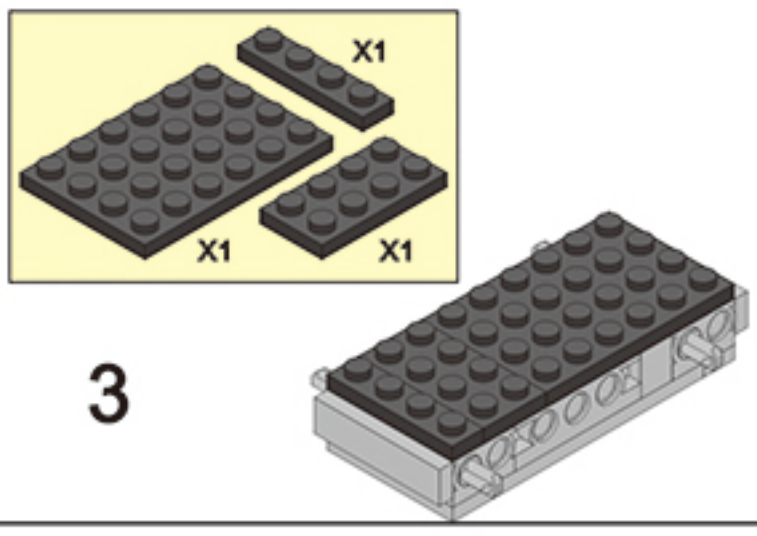


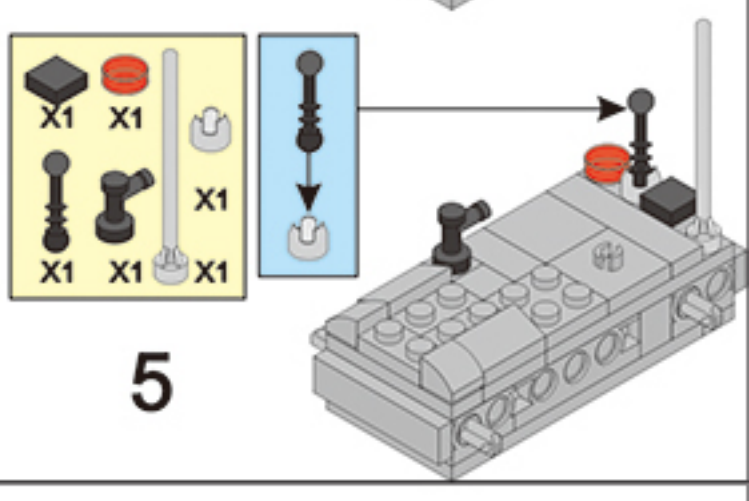


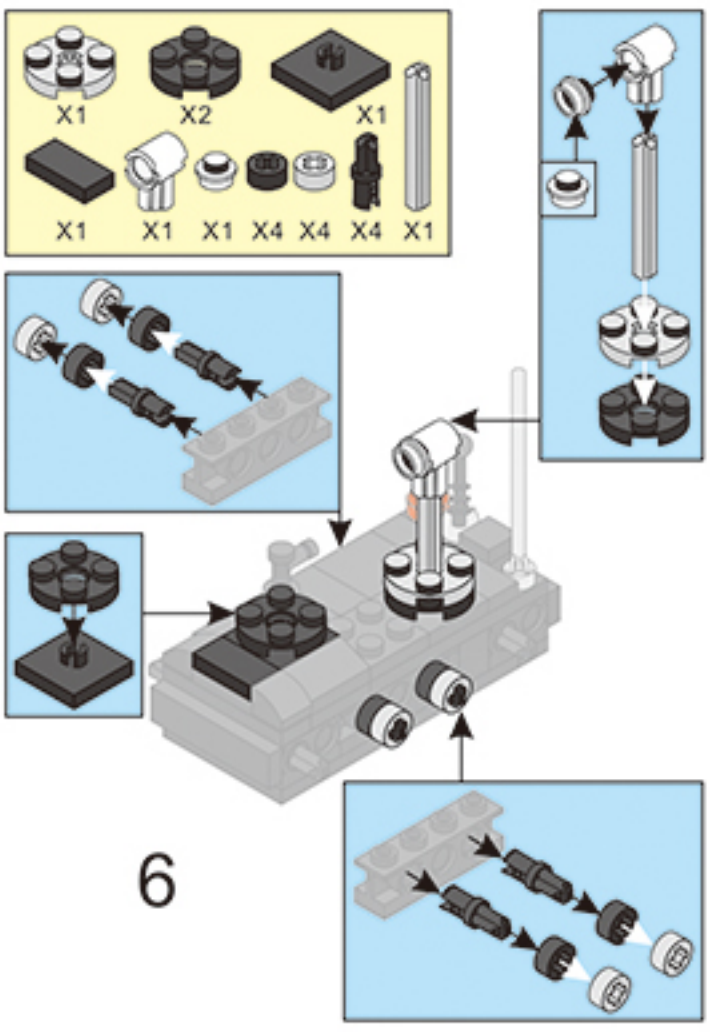


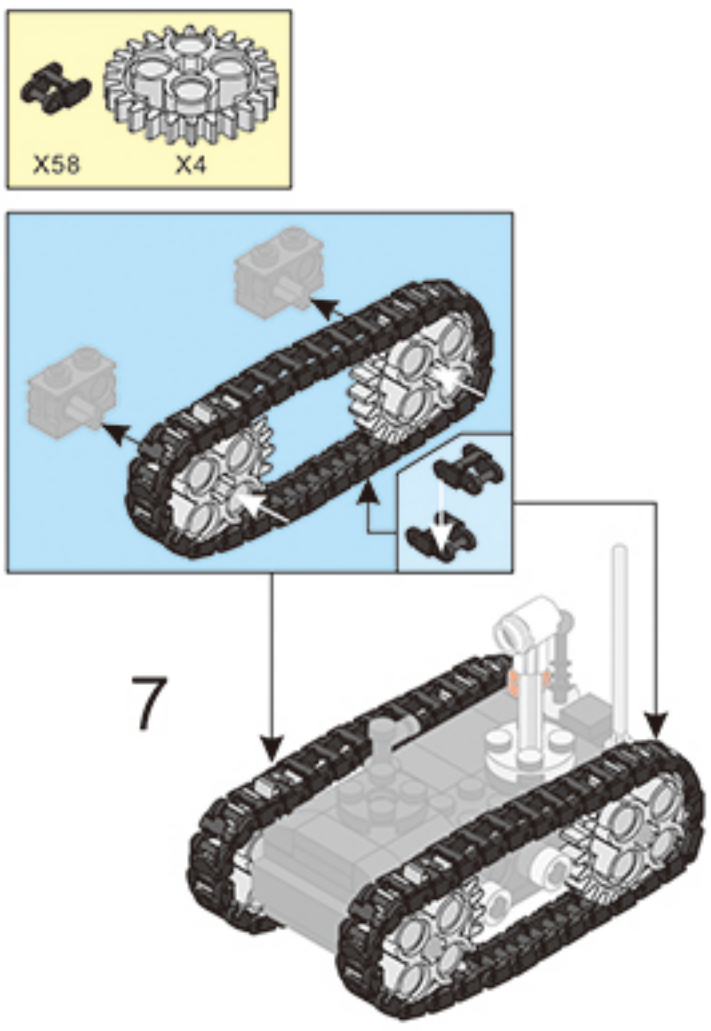


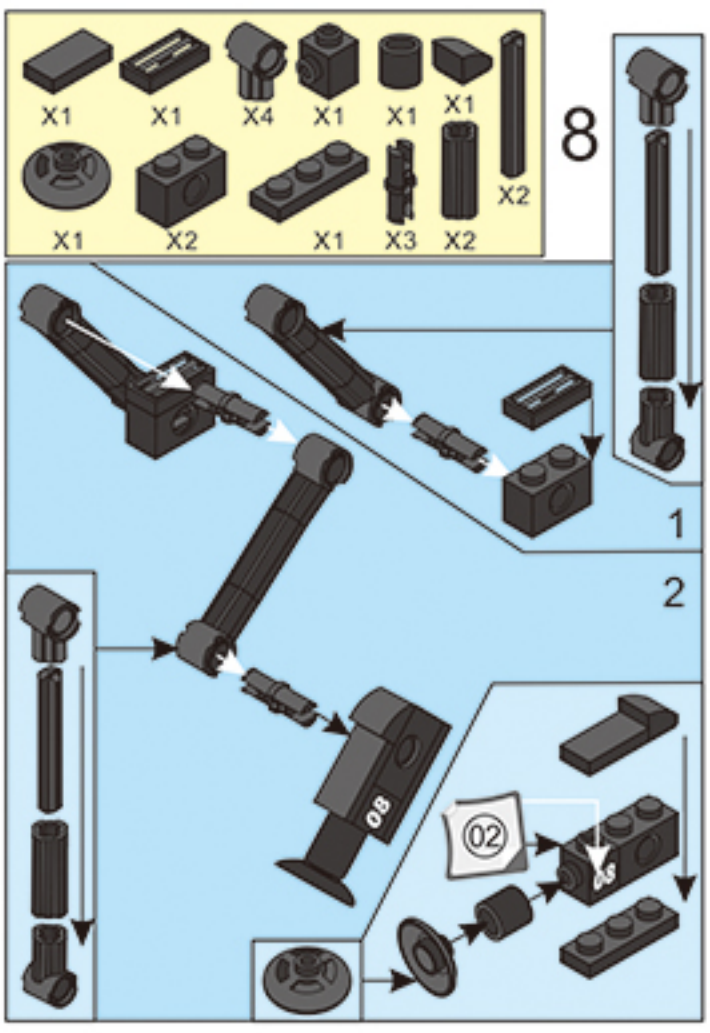


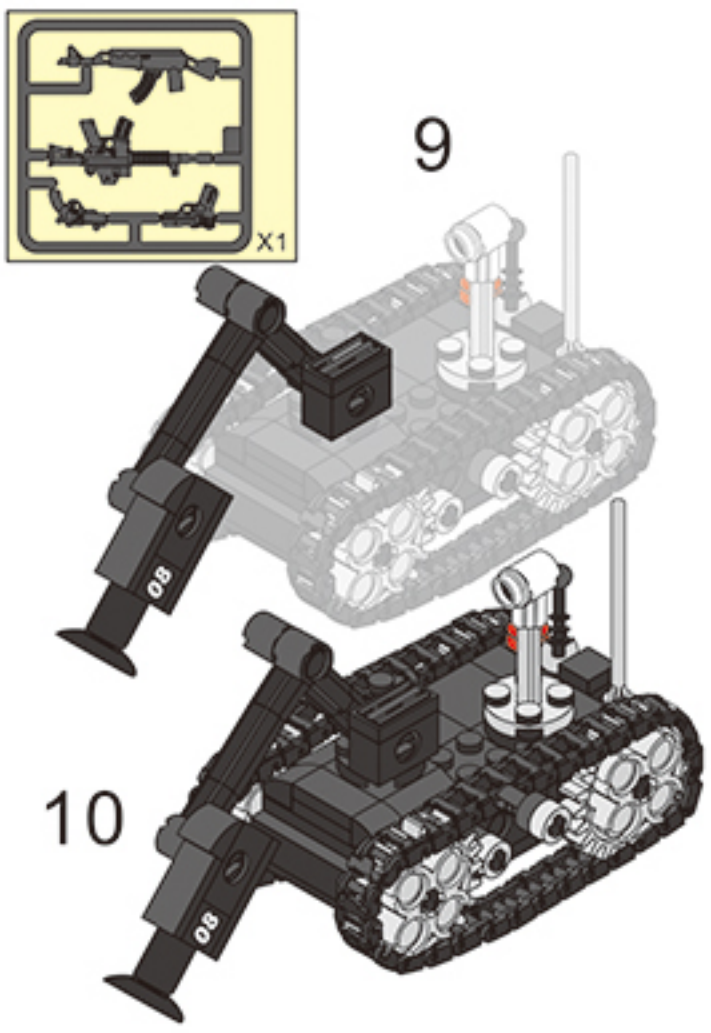

94 PCS 6+ M38 - B0587E

COLOUR

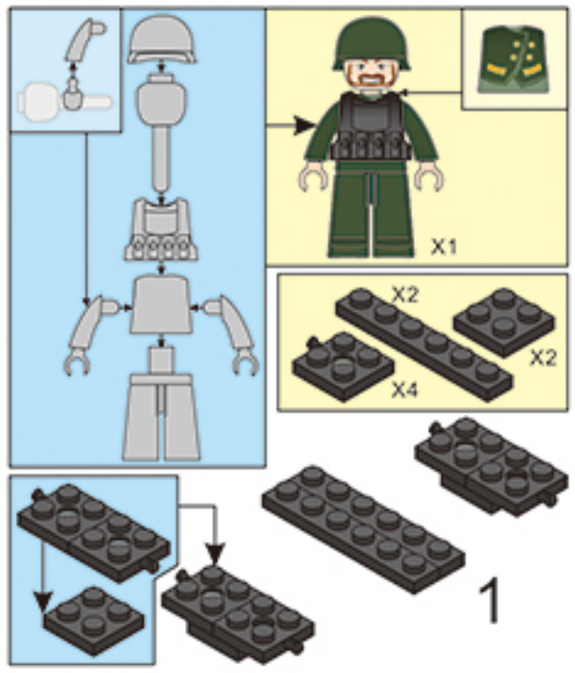


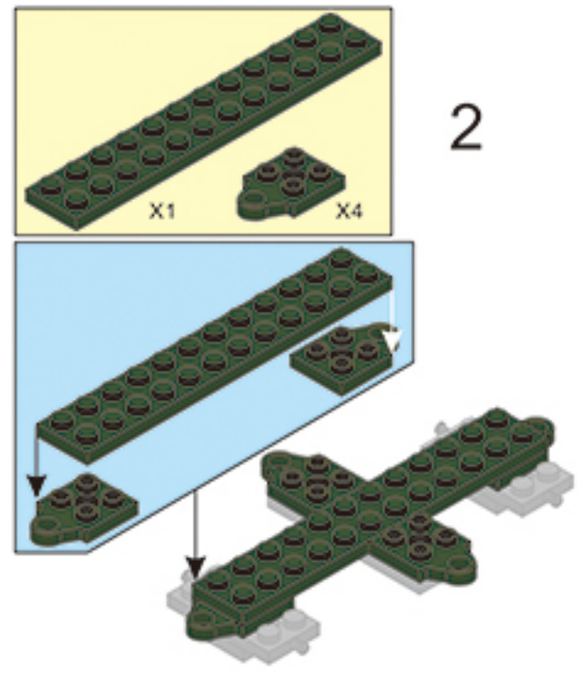


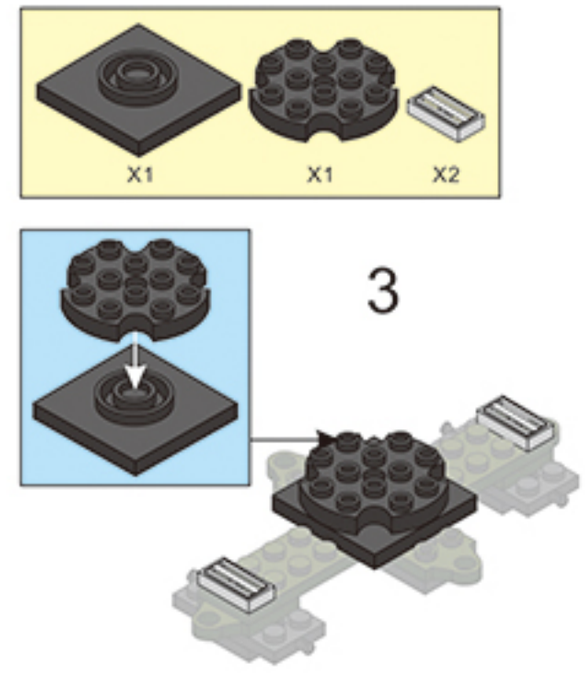


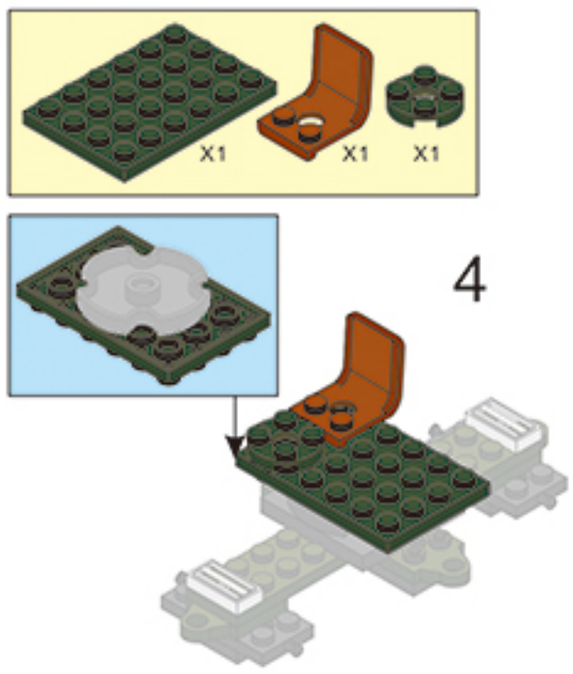


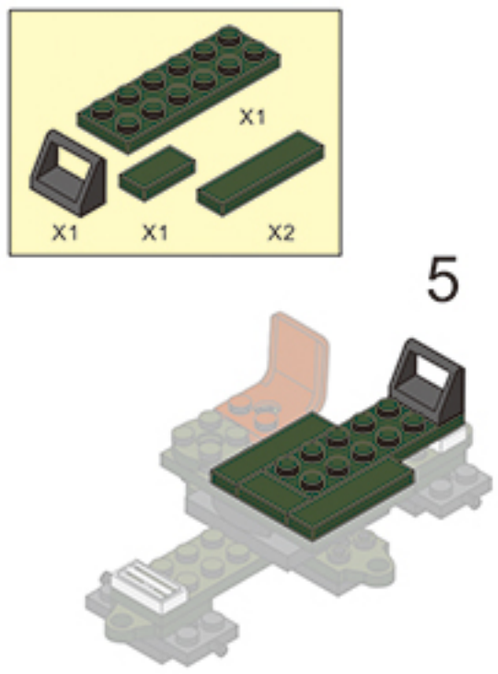


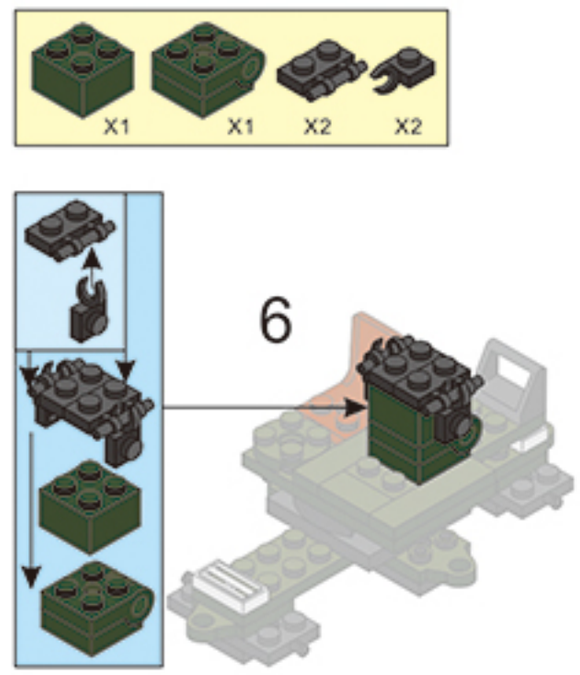


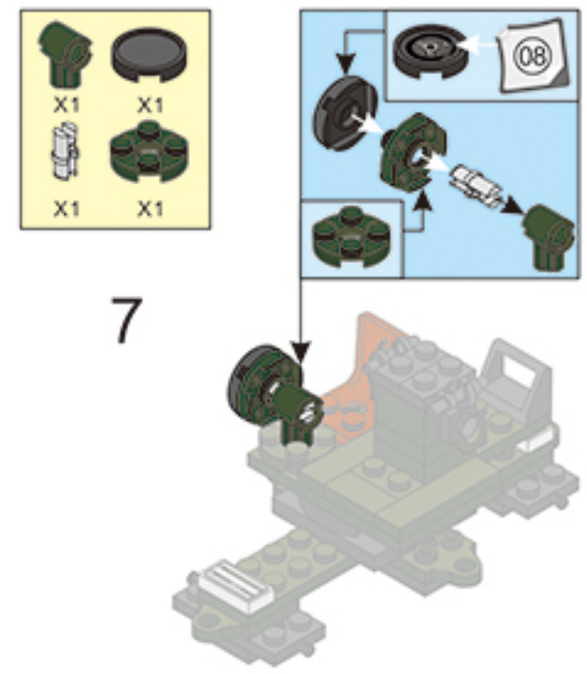


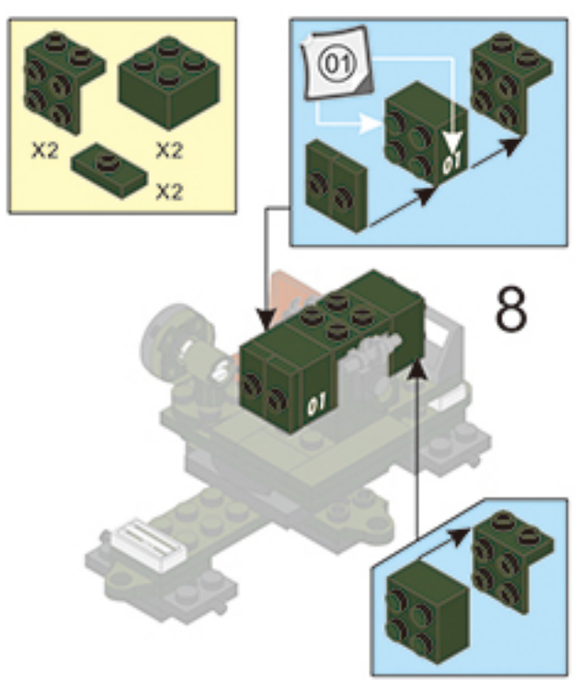


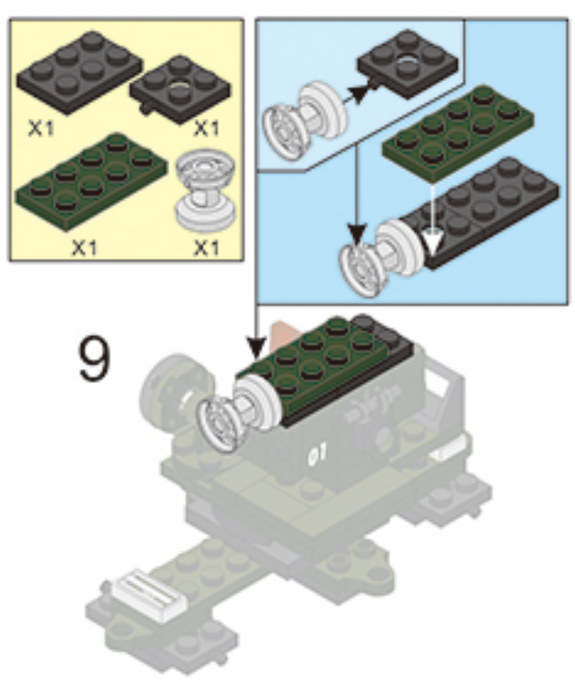


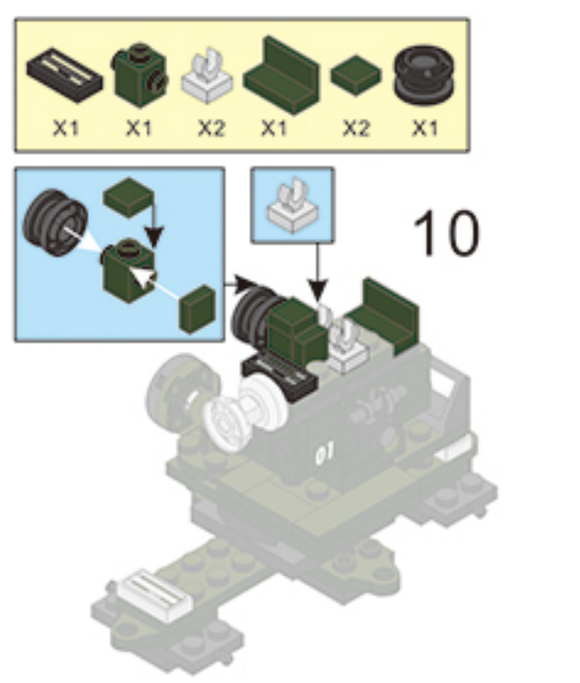


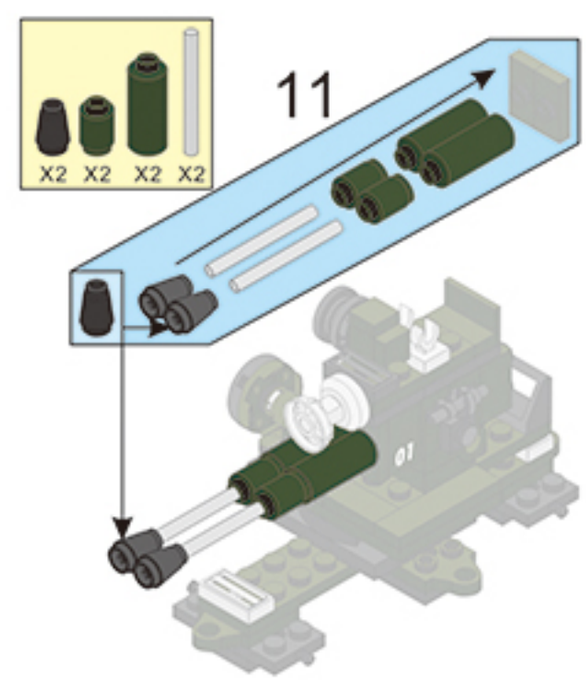


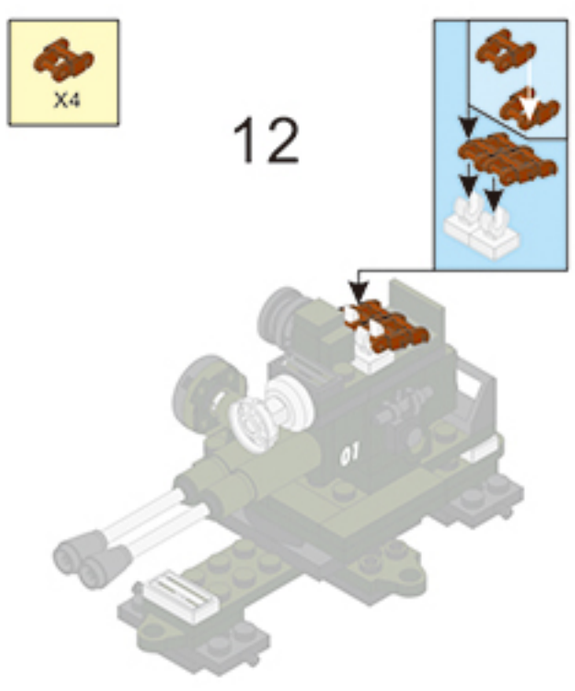


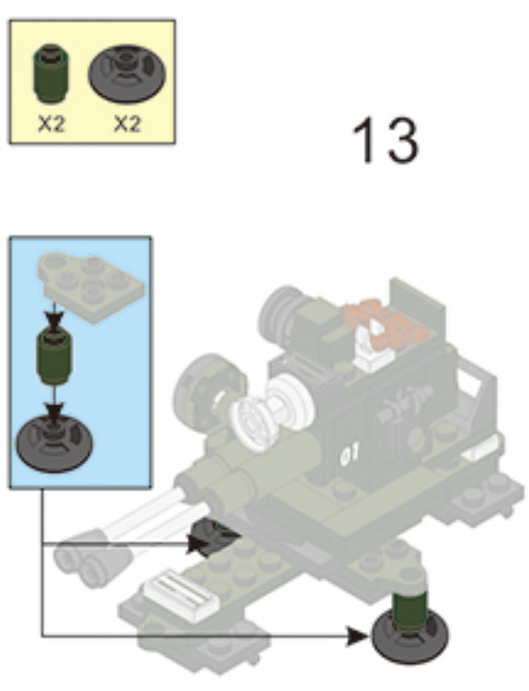


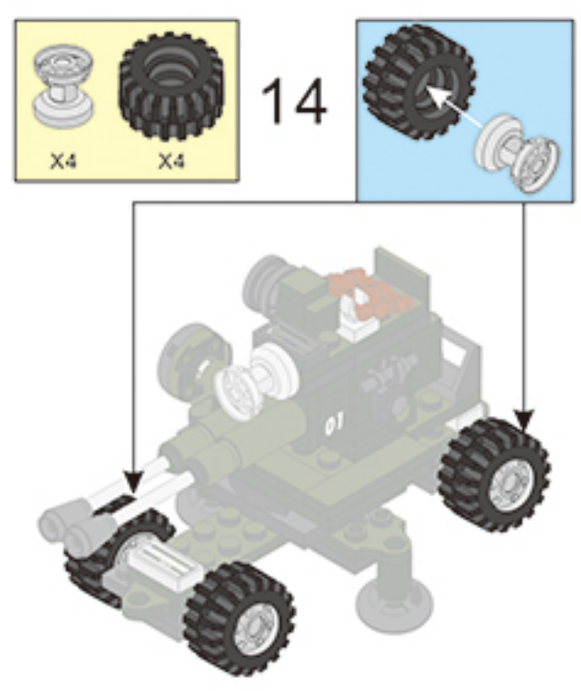


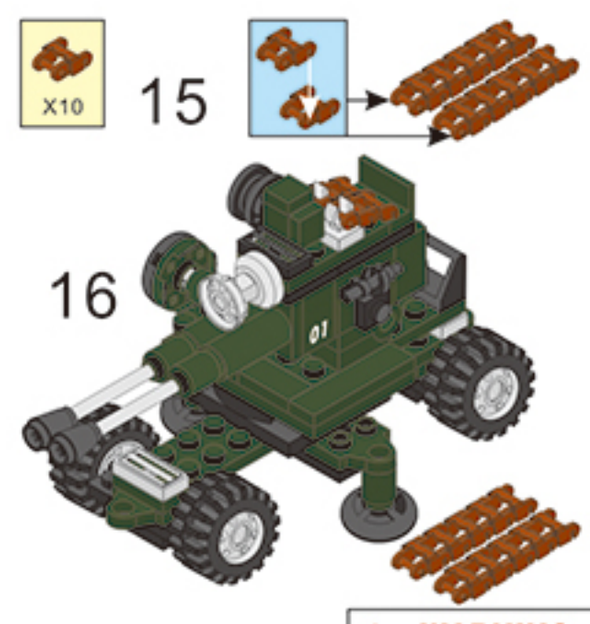


**WARNING:**
CHOKING HAZARD - Small parts.
Not for children under 3 years.

83 PCS 6+ M38 - B0587F

**WARNING:**
CHOKING HAZARD-small parts.
Not for children under 3 years.

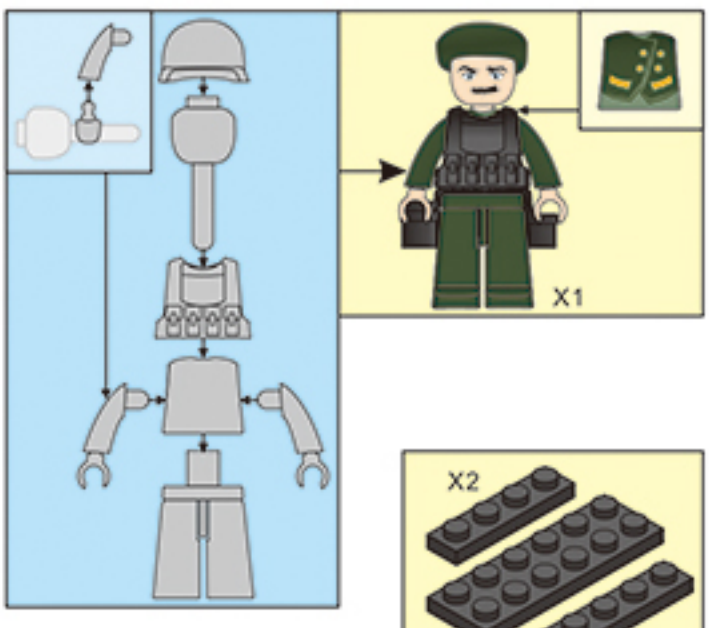


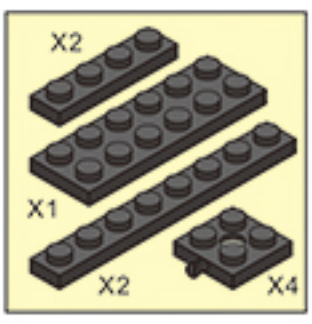


1

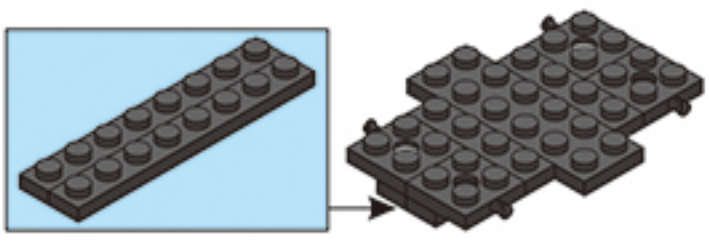

COLOUR

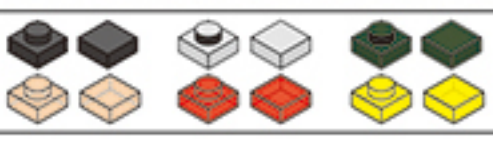

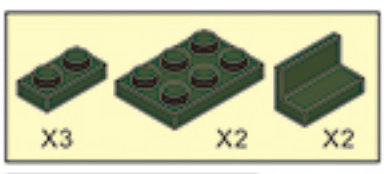


2

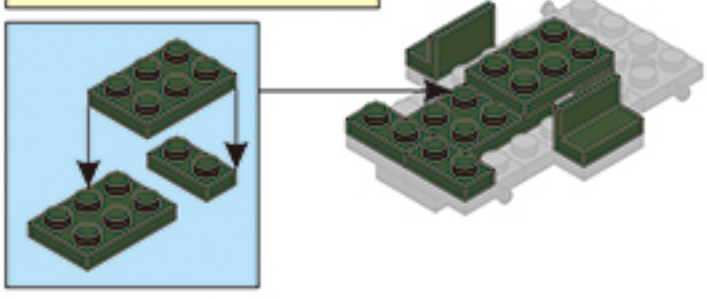

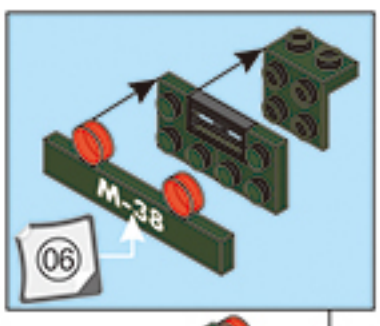


4

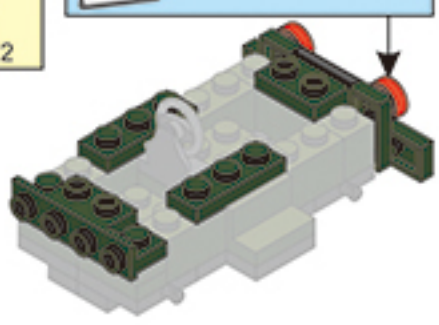

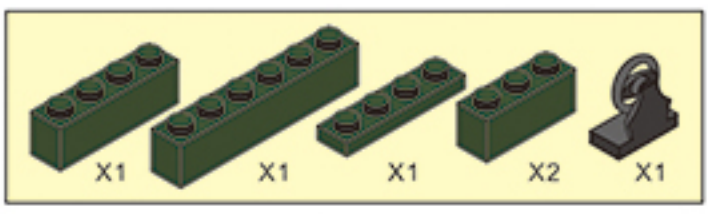


3

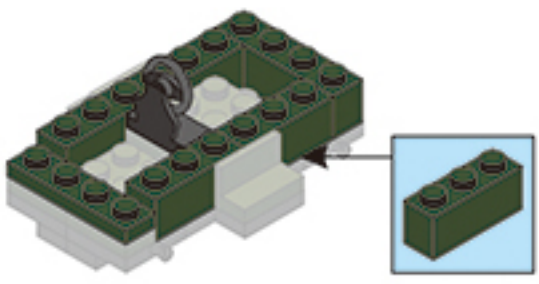

5

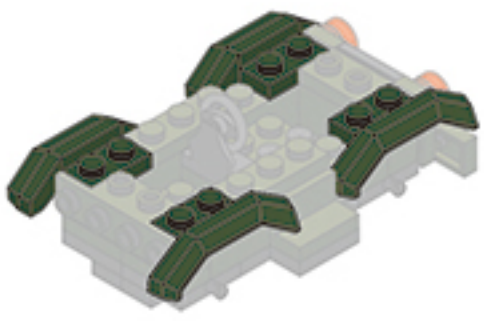

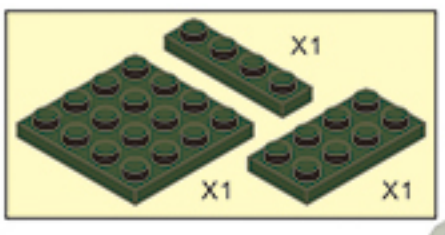


6

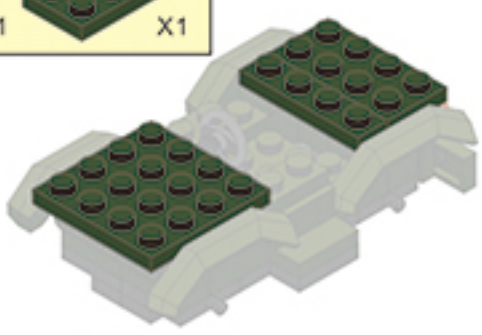

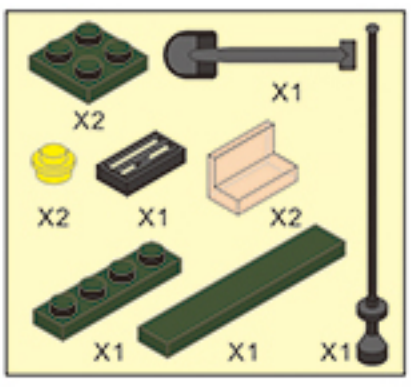


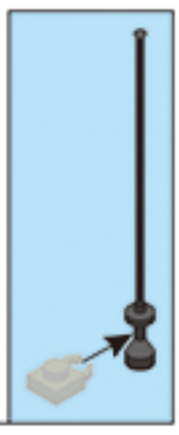

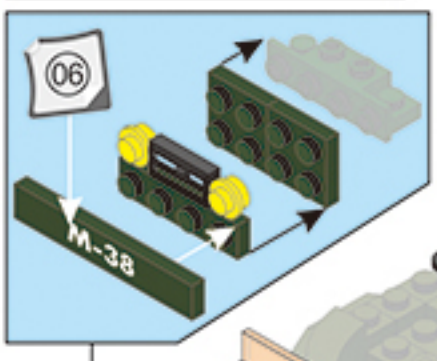


8

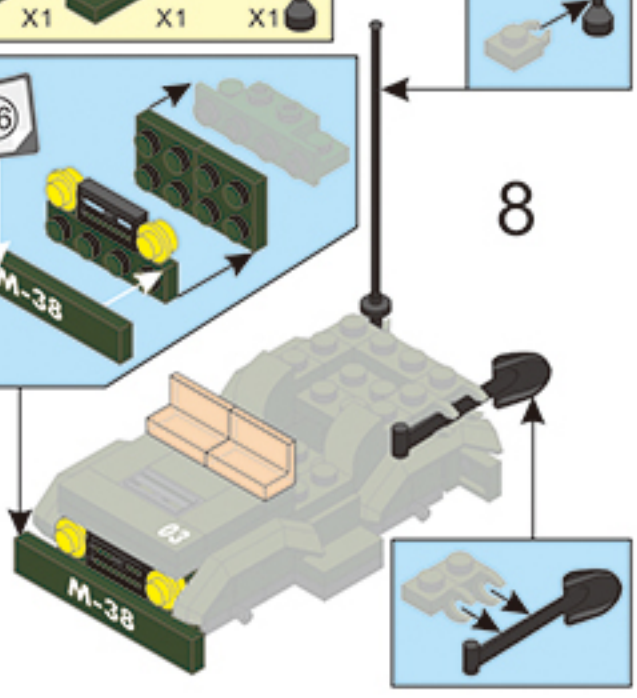


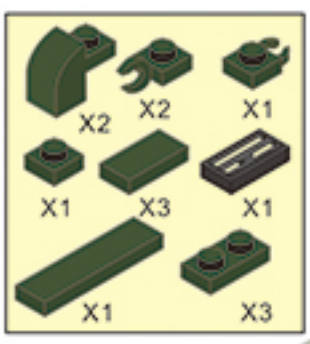


7

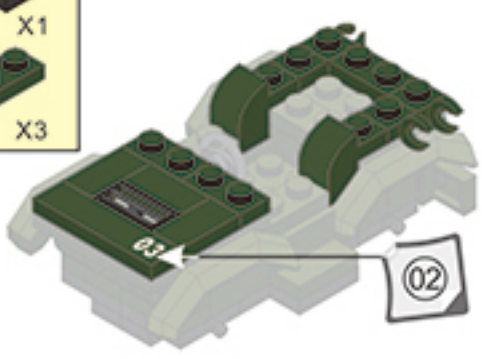


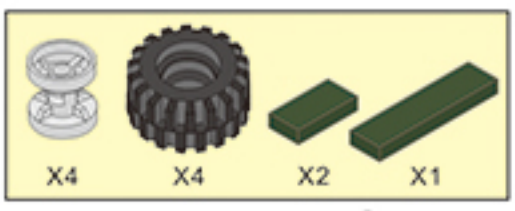


9

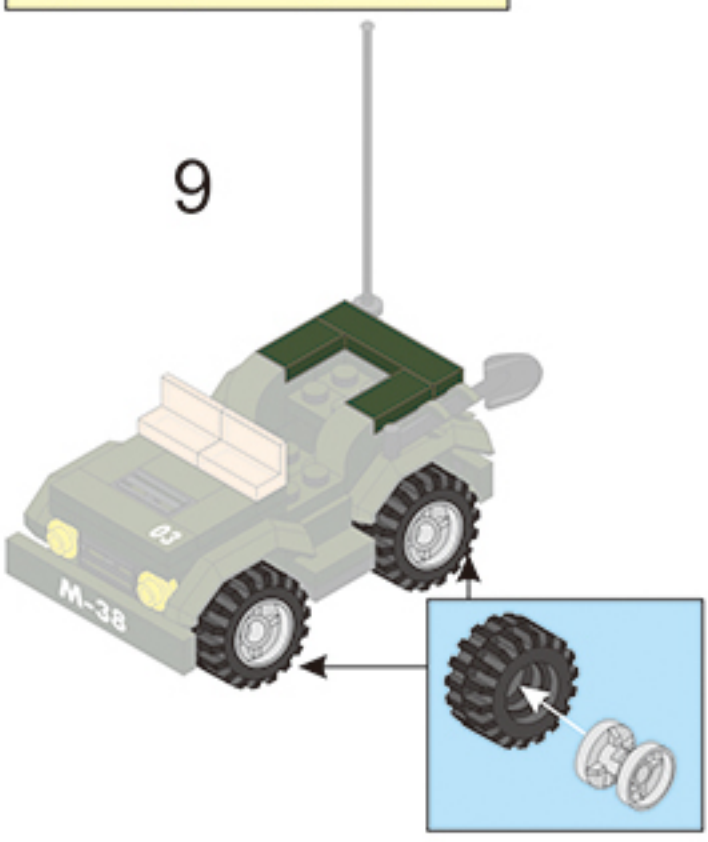


10

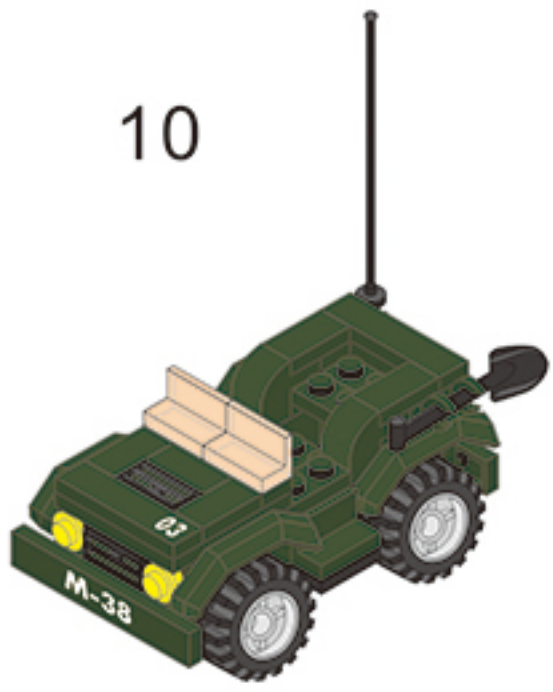

93 PCS 6+ M38 - B0587G

COLOUR

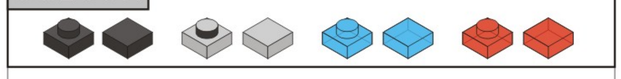

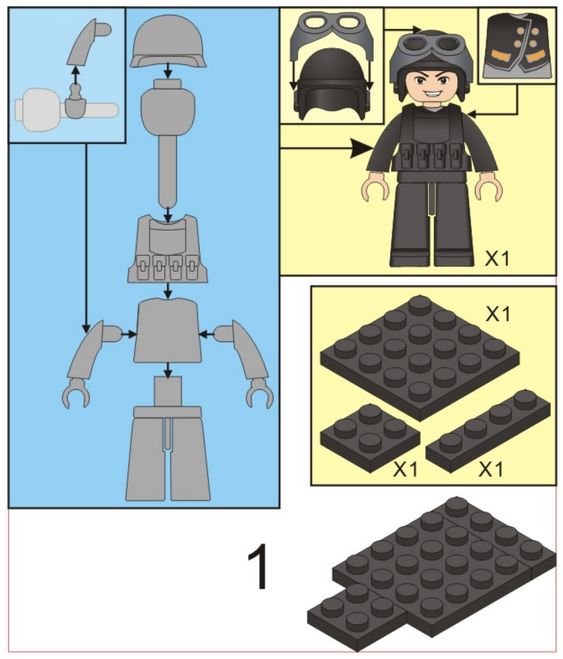


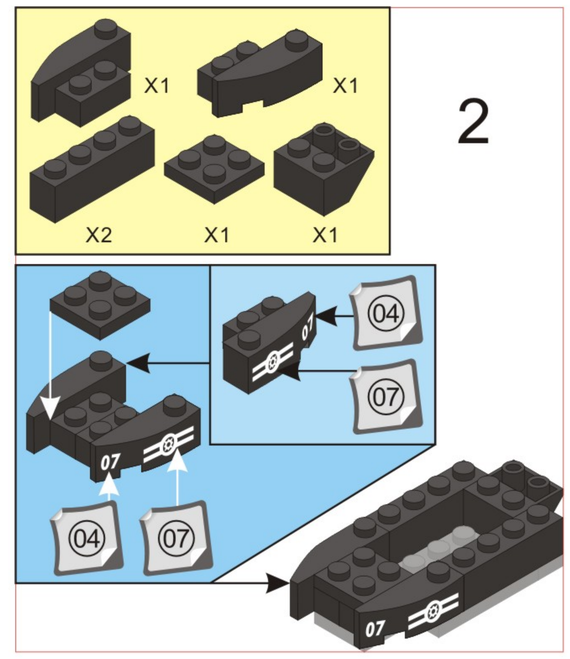


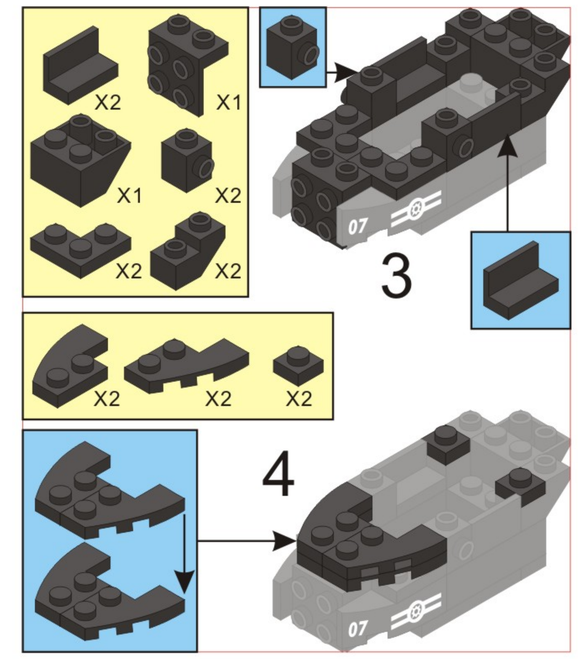


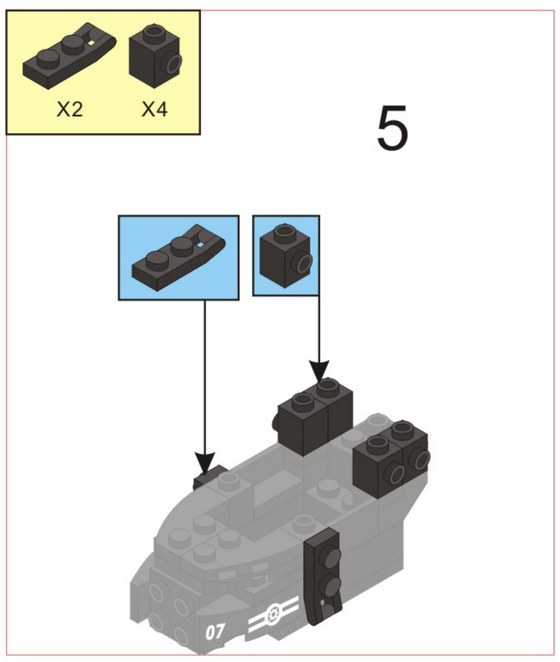


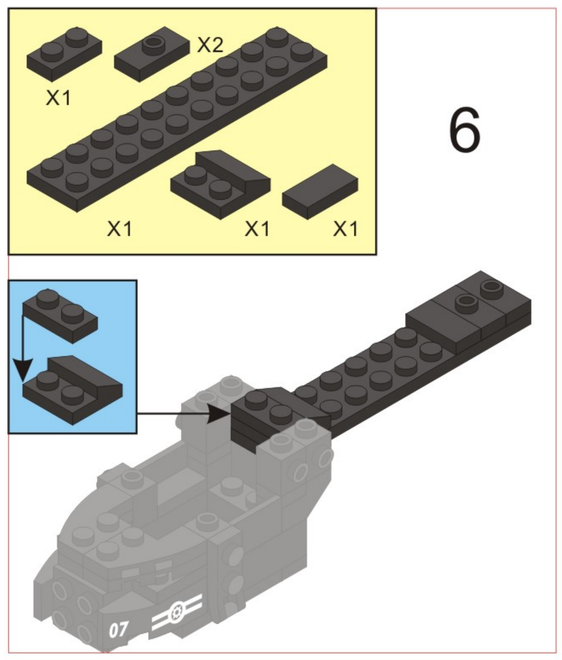


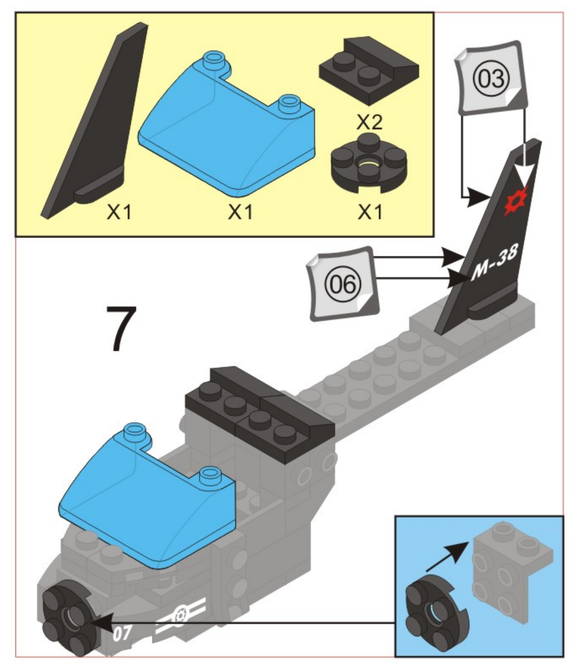


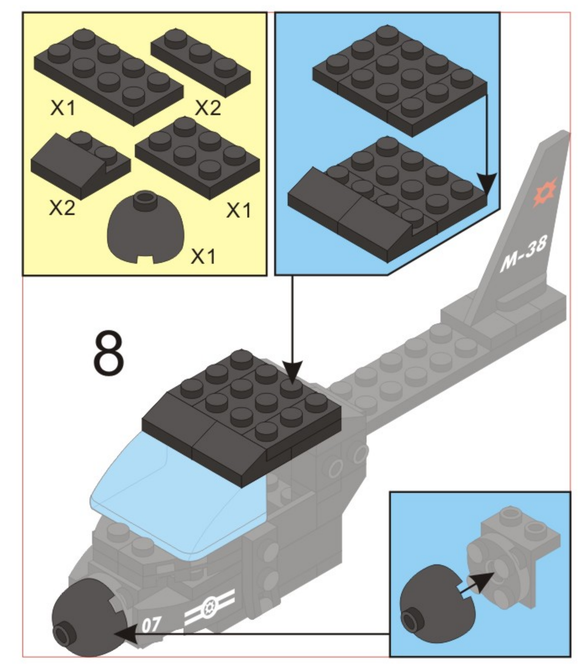


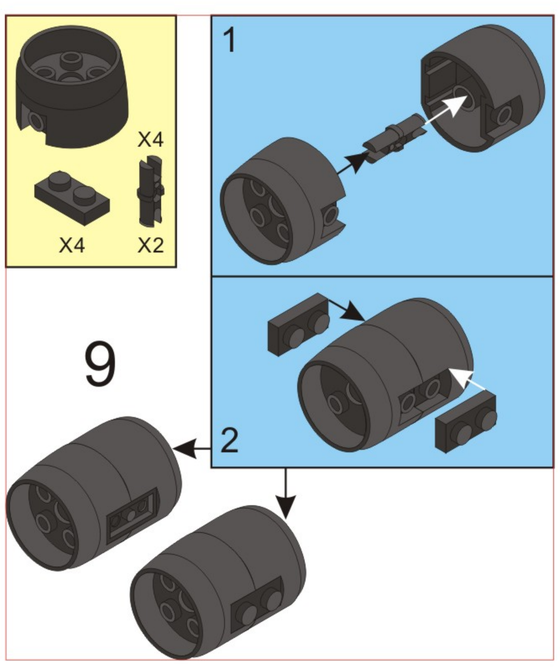


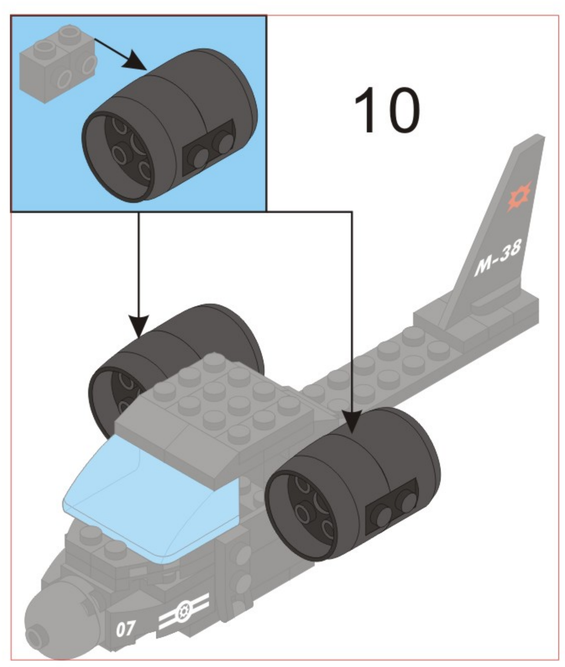


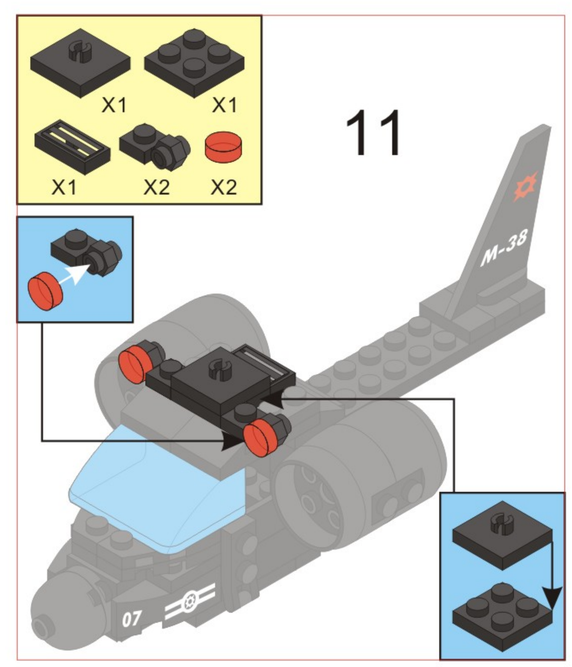


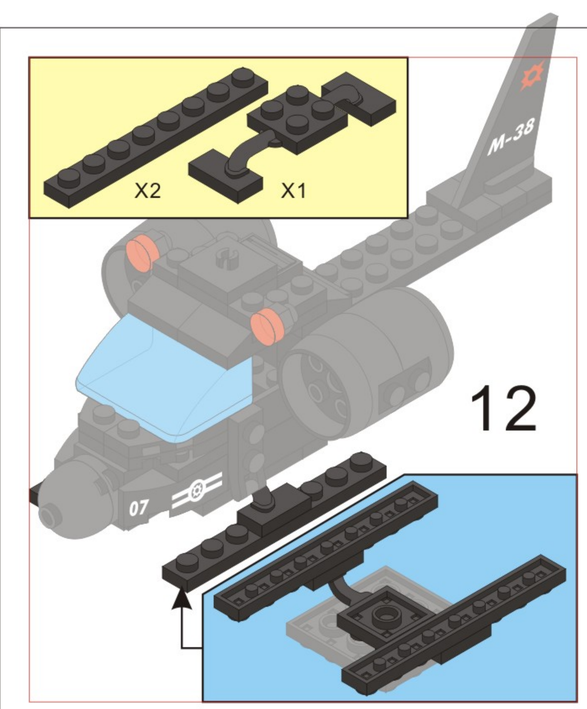


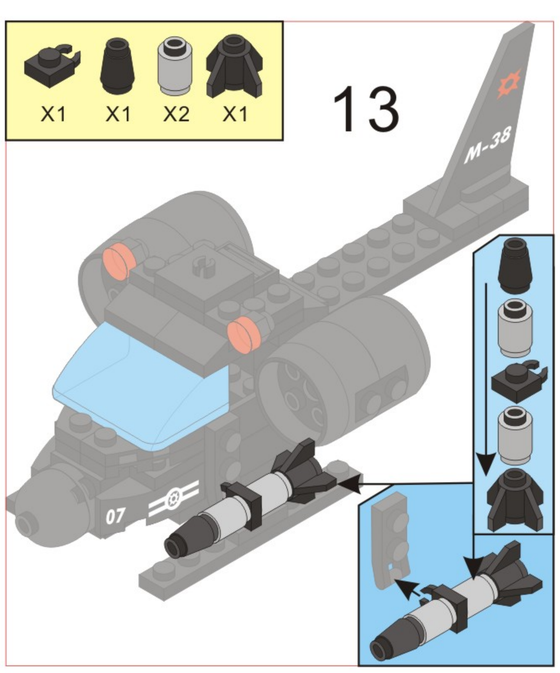


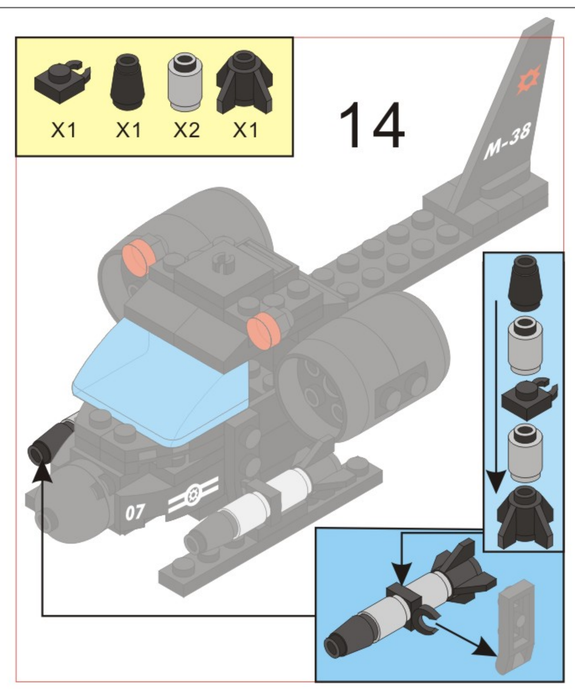


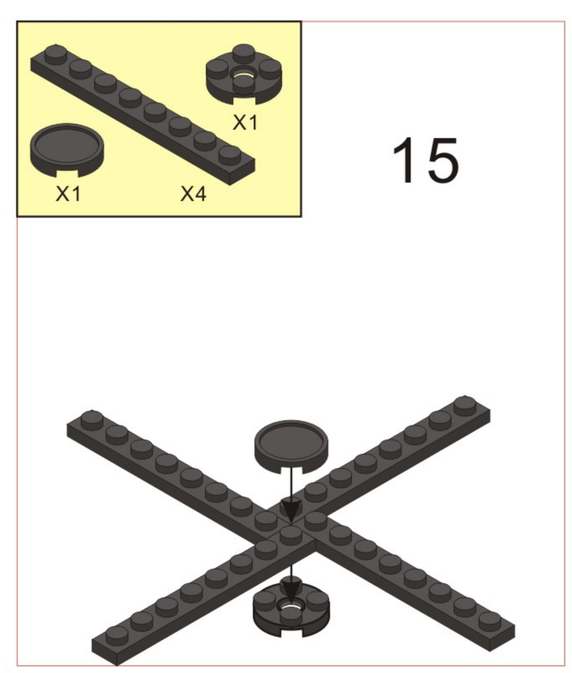


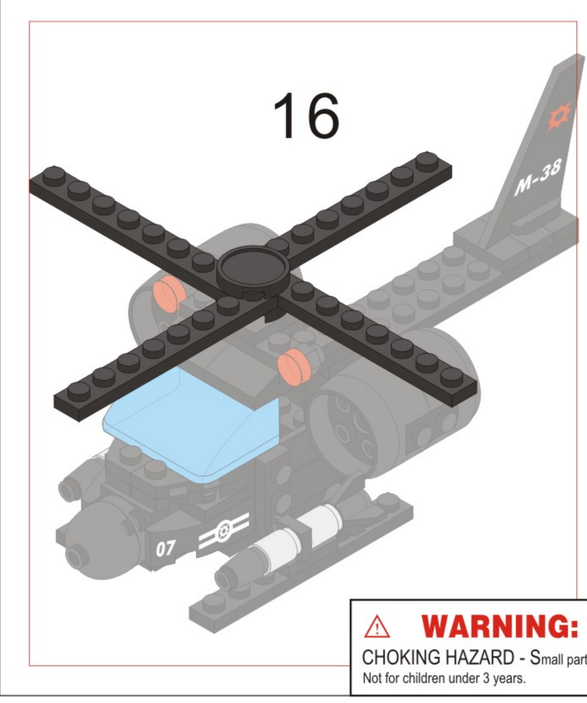


**WARNING:**
CHOKING HAZARD - Small parts.
Not for children under 3 years.

73 PCS 6+ M38 - B0587H
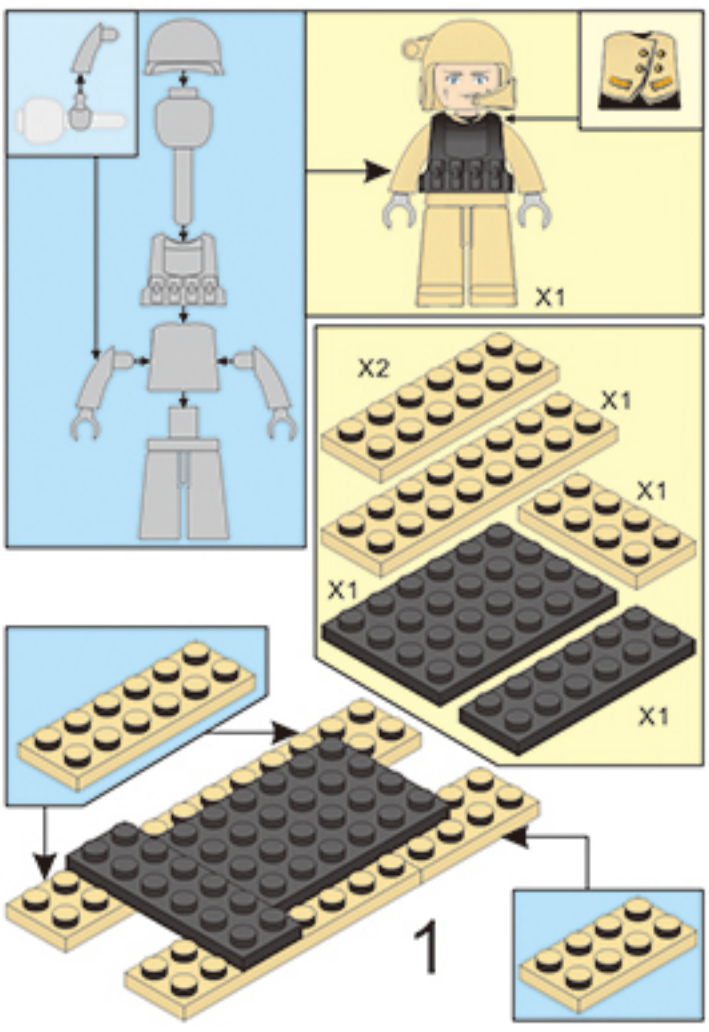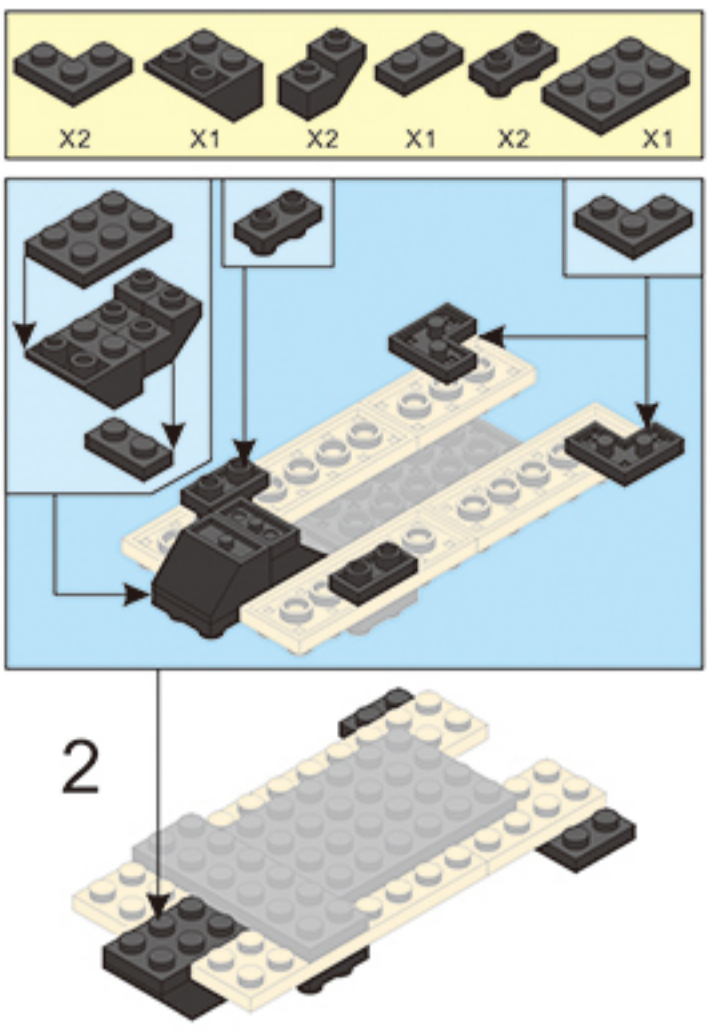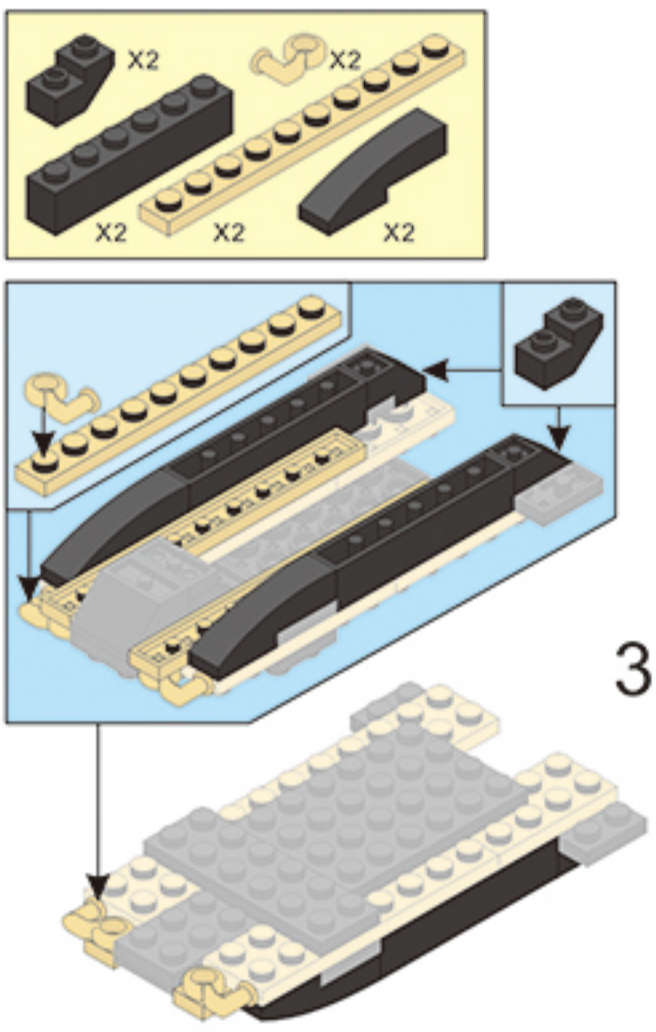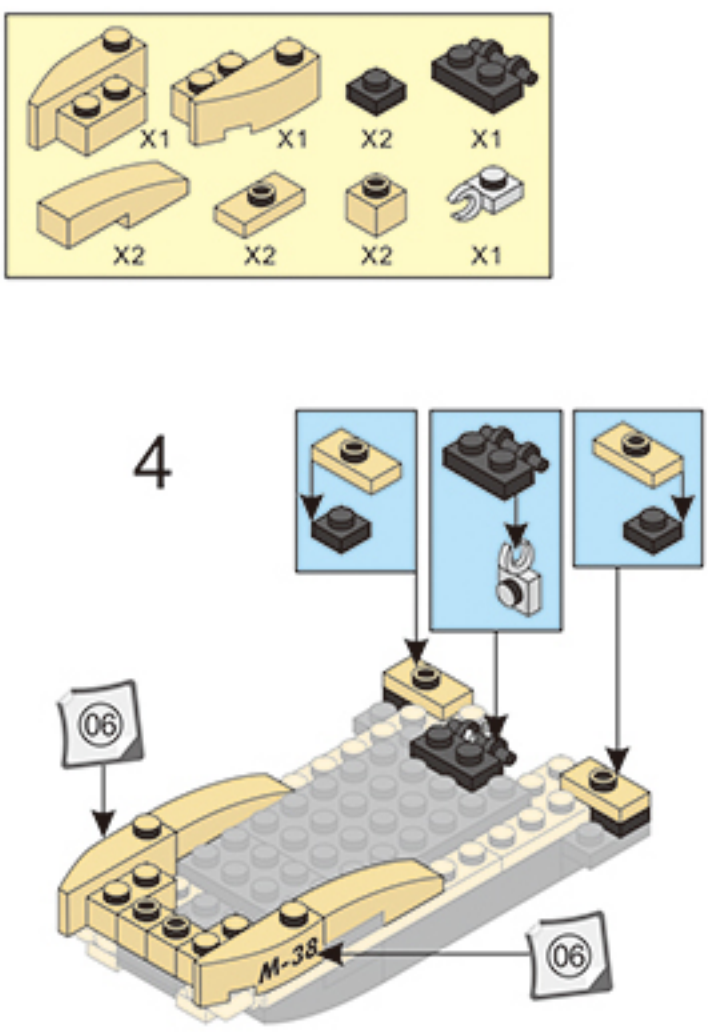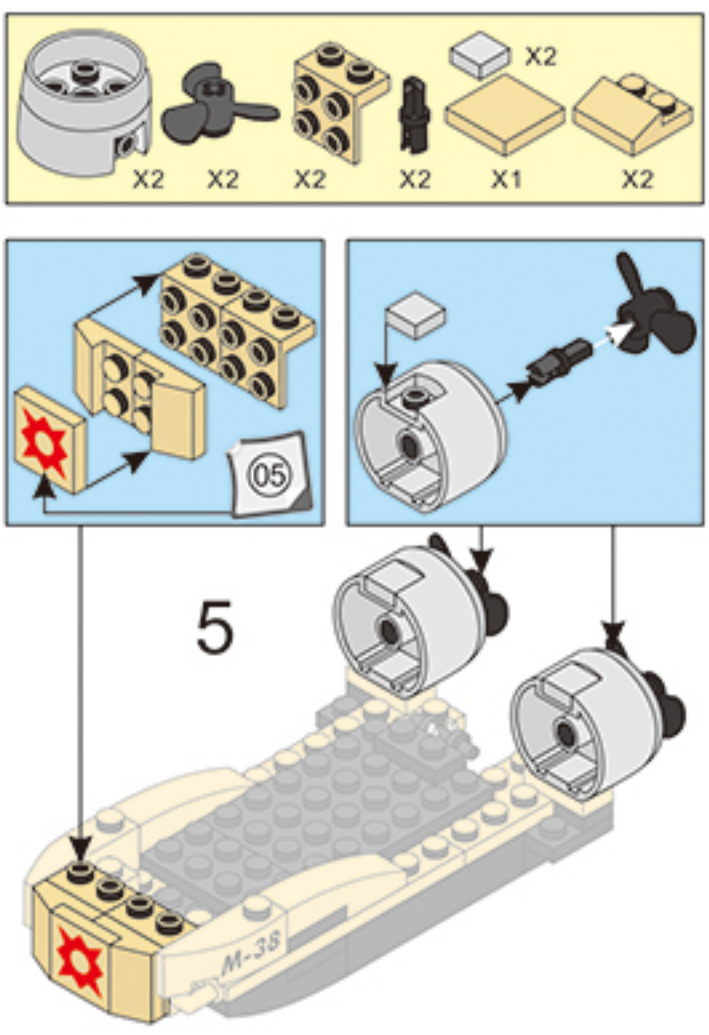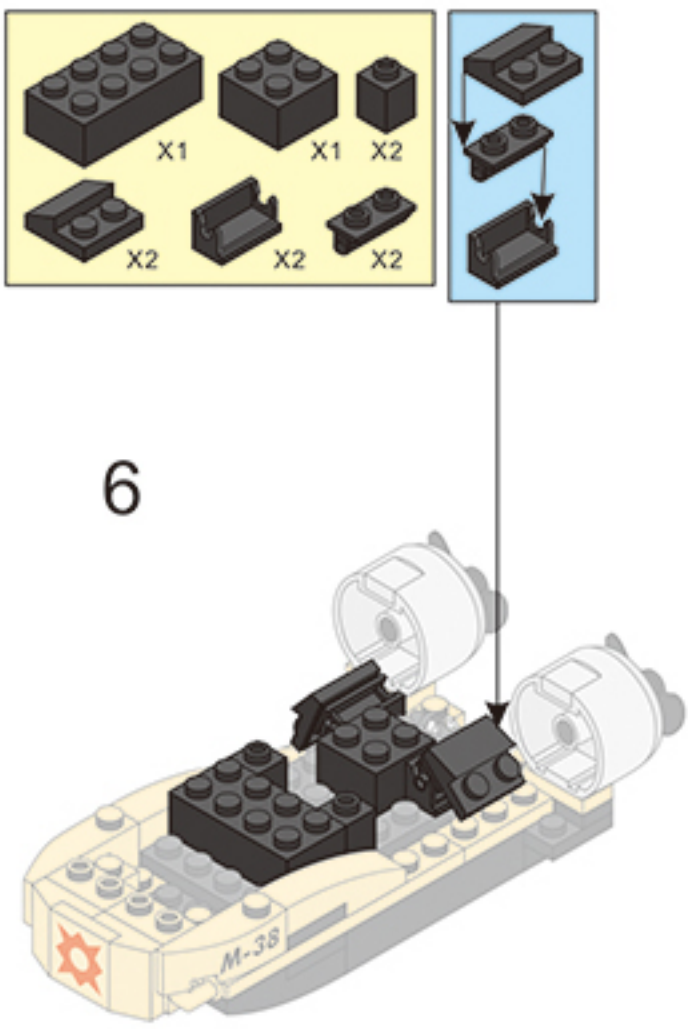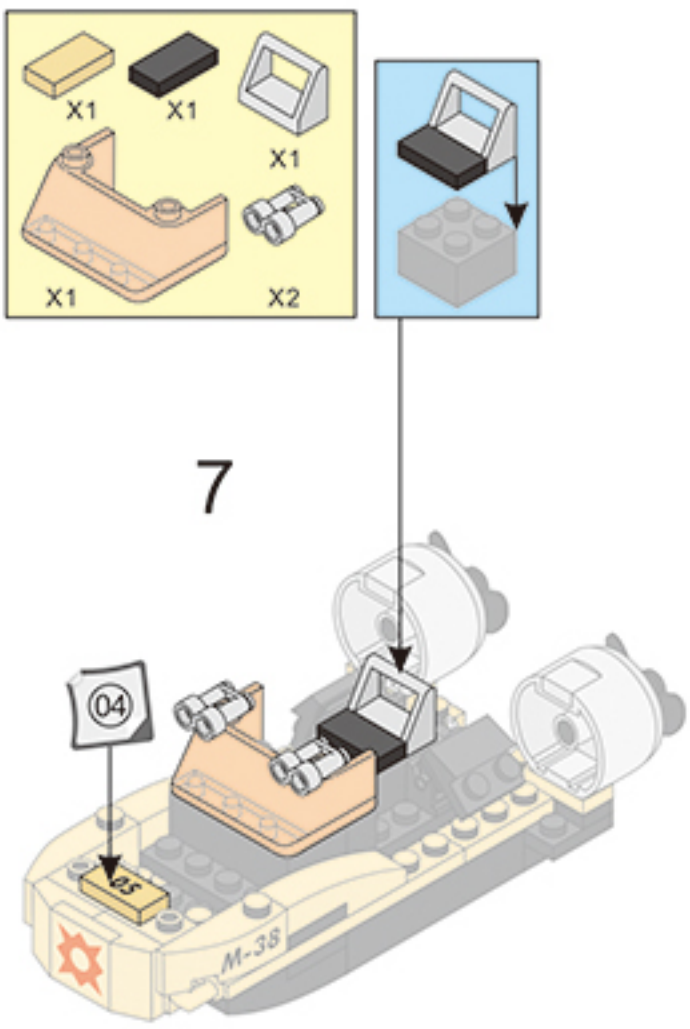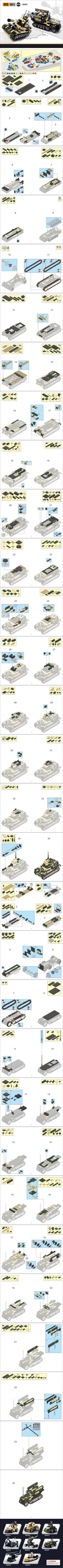
**WARNING:**
CHOKING HAZARD-small parts.
Not for children under 3 years.