saunalife

Model S4 Wood-Fired Hot Tub
Quick Guide

Serial No_____

I

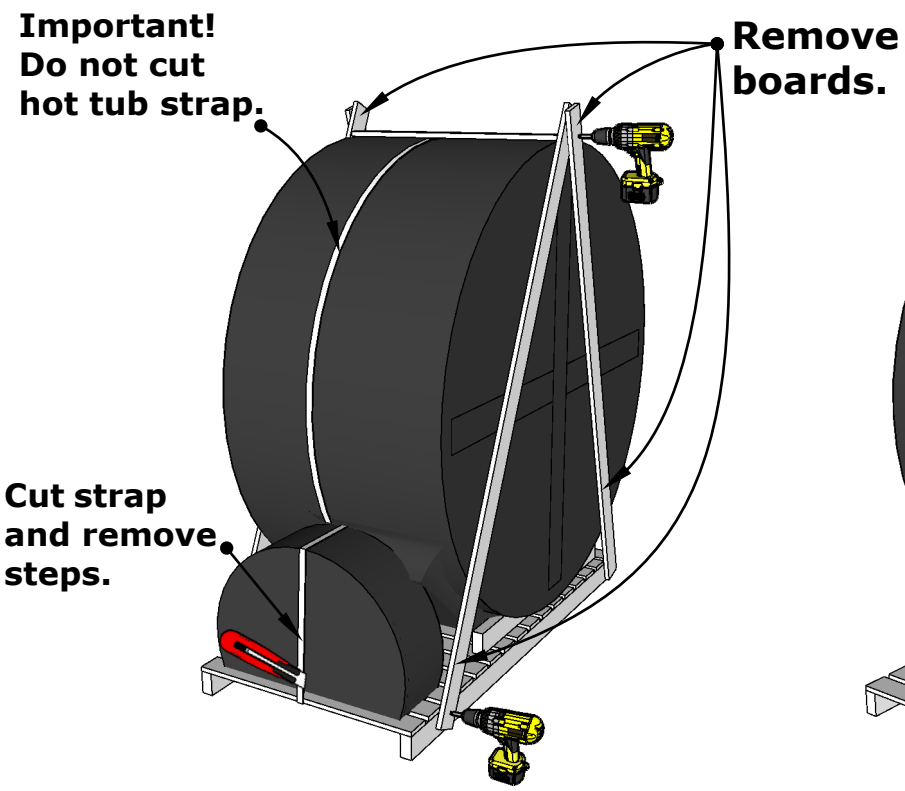

II

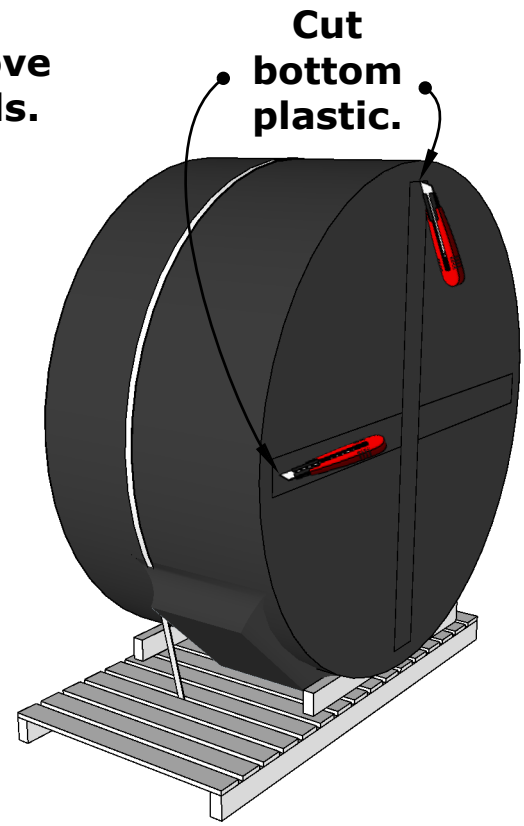

III

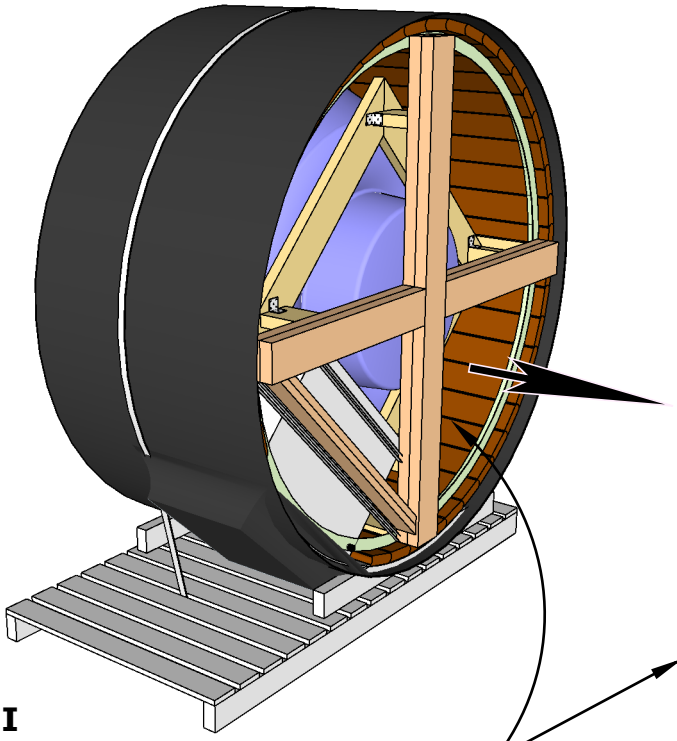

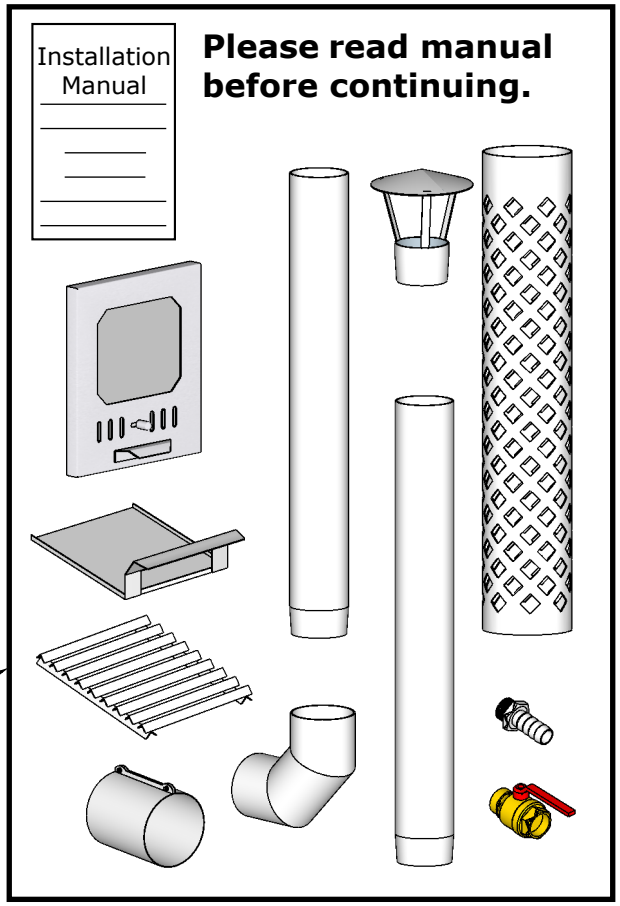

**Compare
contents with
parts diagram.**

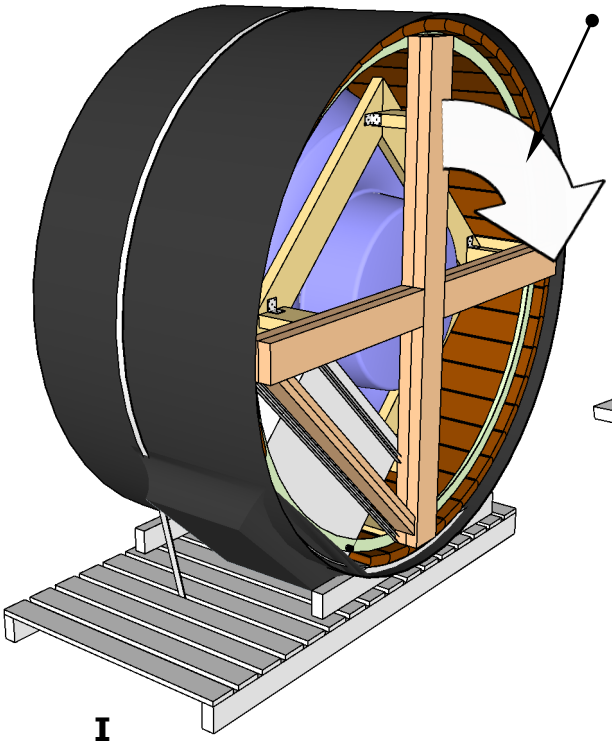

I

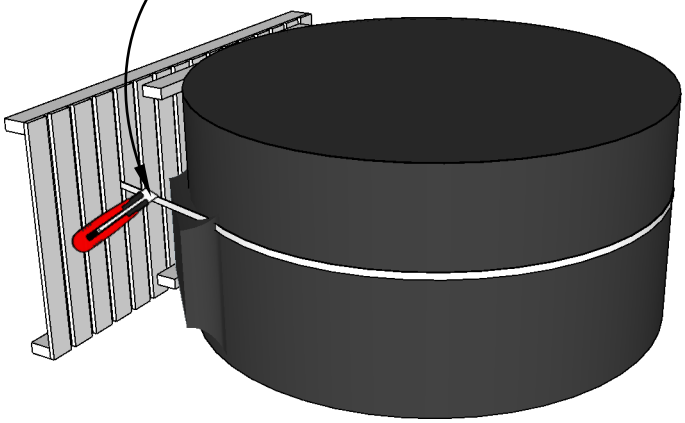

II

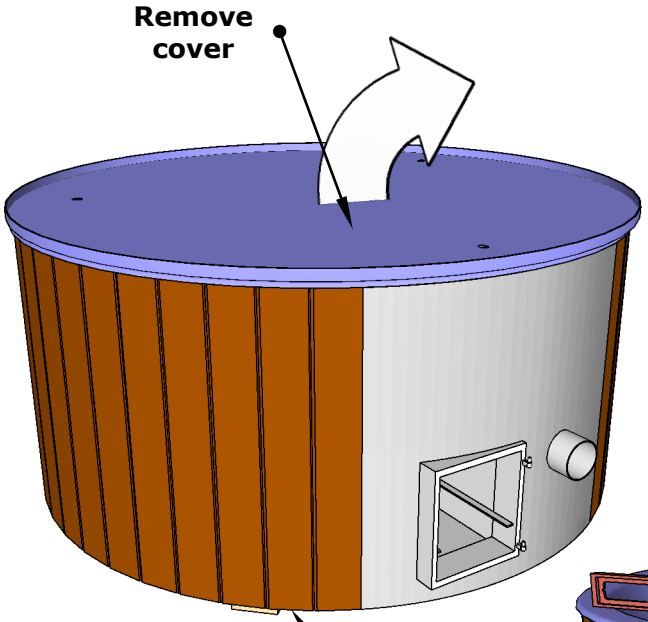

III

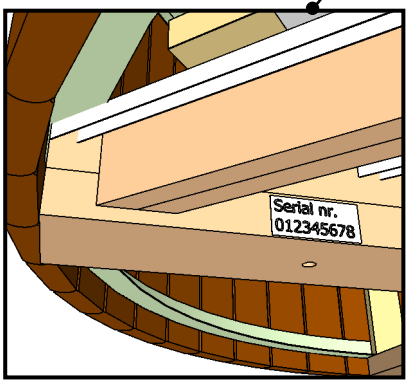

Use liquid level.

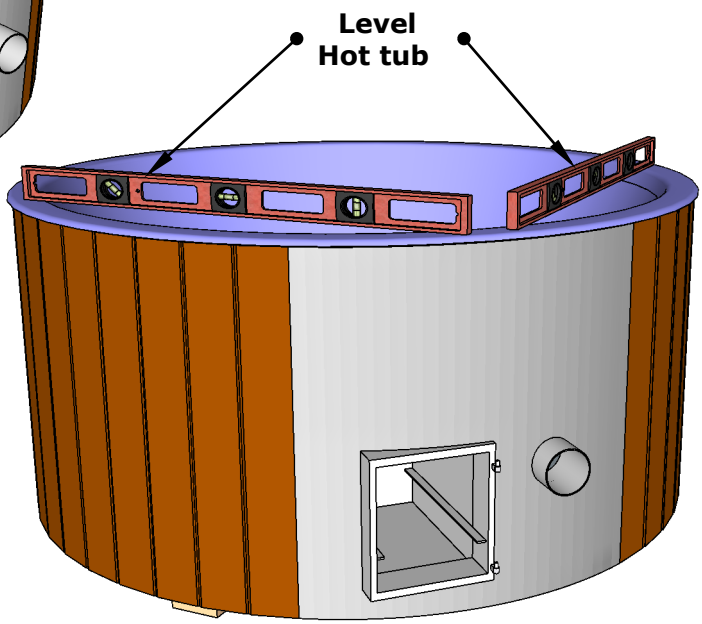

IV

1.

saunalife
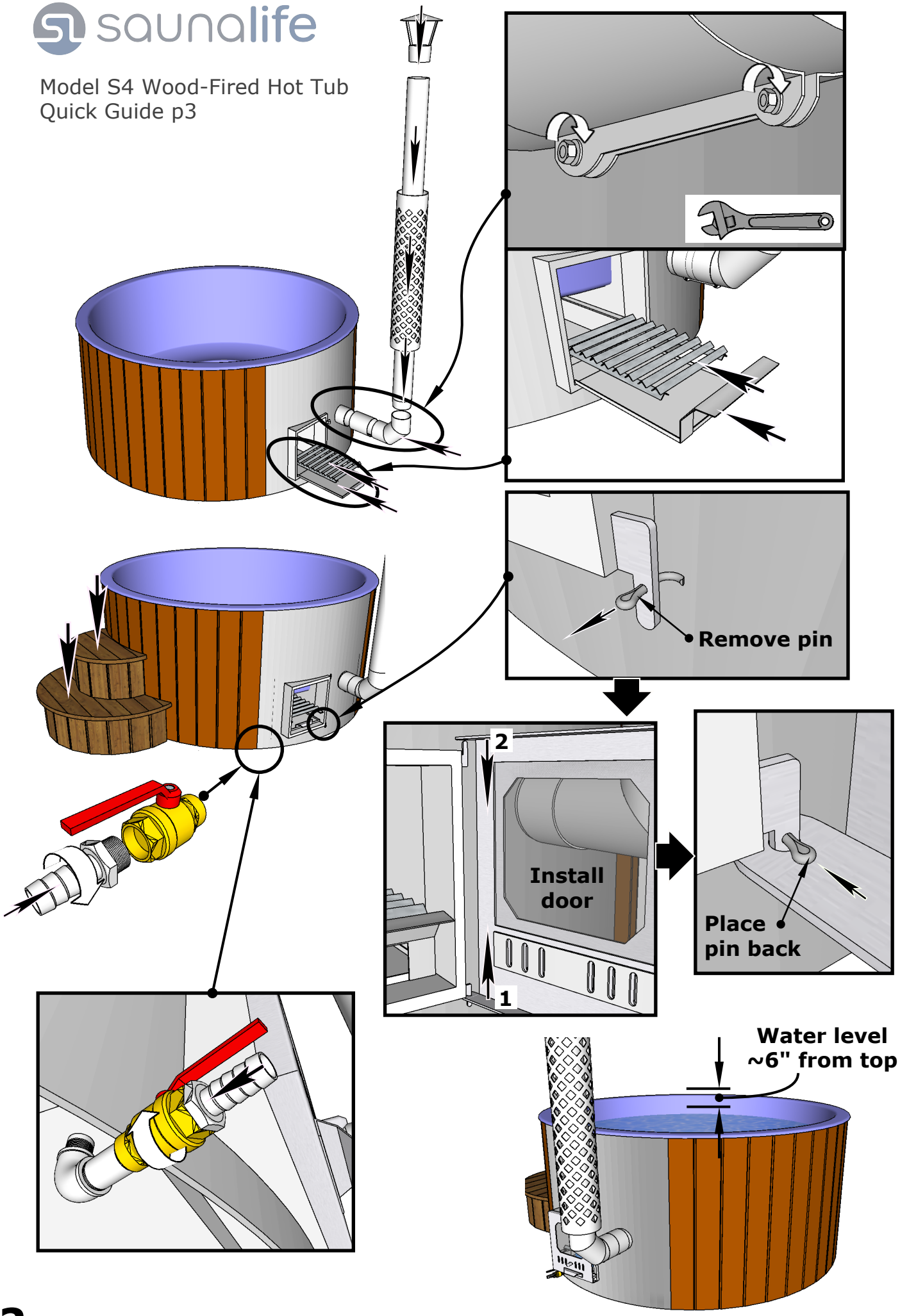
Model S4 Wood-Fired Hot Tub
Quick Guide p3