Self Powered Elliptical
(CC-SPE)

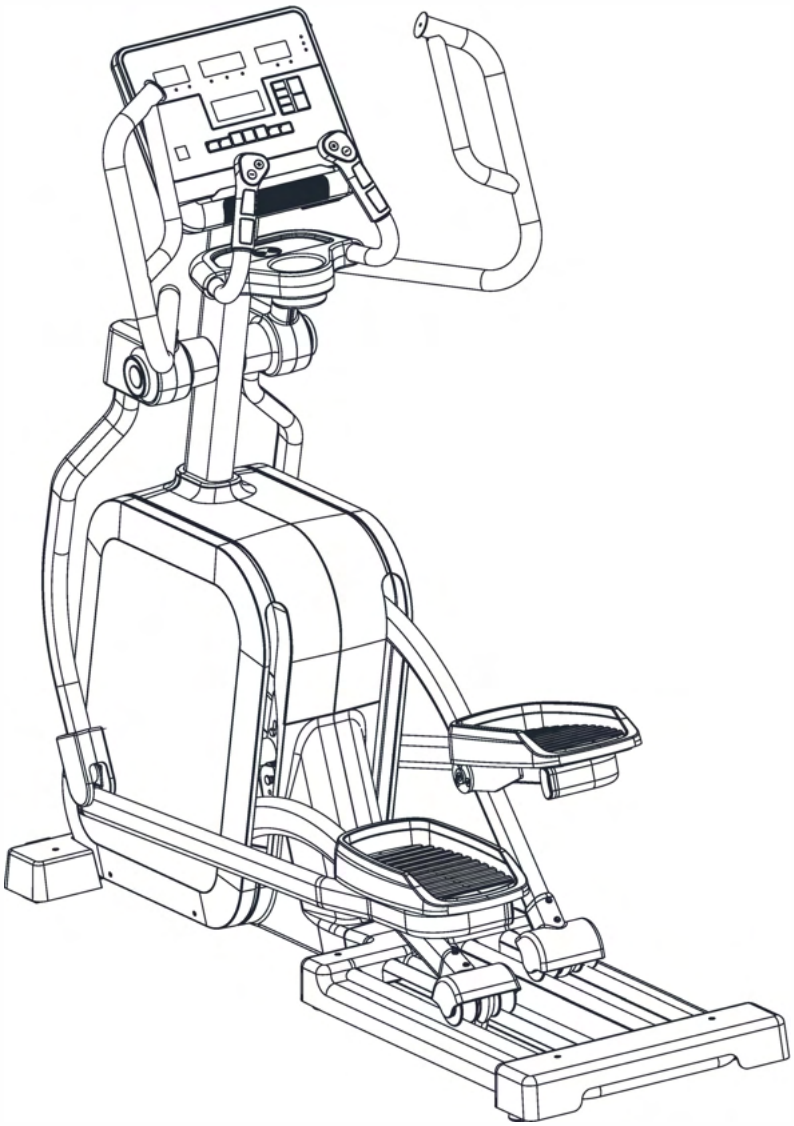

Installation Manual

user's manual

CONTENTS

01/ SAFETY USE INSTRUCTION
02/ PRODUCT INTRODUCTION
03/ PART DETAILS
04/ INSTRUCTIONS FOR INSTALLATION
09/ MAINTENANCE GUIDE
10/ CONNECTION BETWEEN ELECTRONIC METER AND BODY
11/ KEYS OF ELECTRONIC METER
12/ PROGRAM DESCRIPTION
18/ OTHER FUNCTIONS
19/ GUIDE
24/ DATA SHEET
24/ HANDLING INSTRUCTIONS

Safety Use Instruction

Thank you choosing our product. For your conveniently and safely use of this training equipment, please read below instruction before workout.

- This product complies with relevant standards for household and non-medical sports products.
- This product of Class SB is subject to electronic speed control, so it must be used in the system control mode.
- Do not use this product at high temperatures or in wet places or in case of water splashing.
- This product has 32 resistance modes for exercise. If you no longer operate pedals, this product will automatically stop working.
- Please read this manual carefully before using the product.
- Keep this product on a solid and flat ground for exercise.
- Do not climb onto the saddle or other parts.
- Keep sufficient space (at least 1m) around this product.
- Improper use or violation of safety instructions may result in personal injury.
- The joysticks and other mechanical parts must not be hampered during exercise.
- Check screws and nuts regularly.
- Children conforming to mental and physical standards may use this product with proper guidance.
- This product must not be used as a toy or game device.
- Instructions for installation, use and training will be available along with ordered parts.
- The owner shall inform other users of safety precautions.
- This product is designed for indoor use only, so it must not be used in open areas.
- Do not transport this product alone.
- Follow the reserve order of installation procedures to disassemble this product.
- Use this product in strict accordance with the manual.
- Never close your eyes while using this product.
- The maximum bearing capacity of this product is 160kg.

  Braking system: not associated with the speed.
- Training: this product is suitable for training of lower and upper limbs as well as the body.
- Keep children far away from this product in case of no adult supervision.

  Note:

  Please seek medical advice before using this product. This is particularly important if you are older than 35 or have any health problems. Please read all precautions before using this product.

Environmentally friendly and recyclable materials:
—Packing box: carton:
—Inner protective package: carton and Styrofoam.
—Film and packing bag: PE.
—Seal: PP tape.

Product Introduction

Dear Customer:

Before you assemble the machine, please refer to the parts list below to sort out the parts. We have prepared all kinds of fasteners. You can assemble the machine soon by following the steps. Hexagon wrench (supplied as a spare parts).

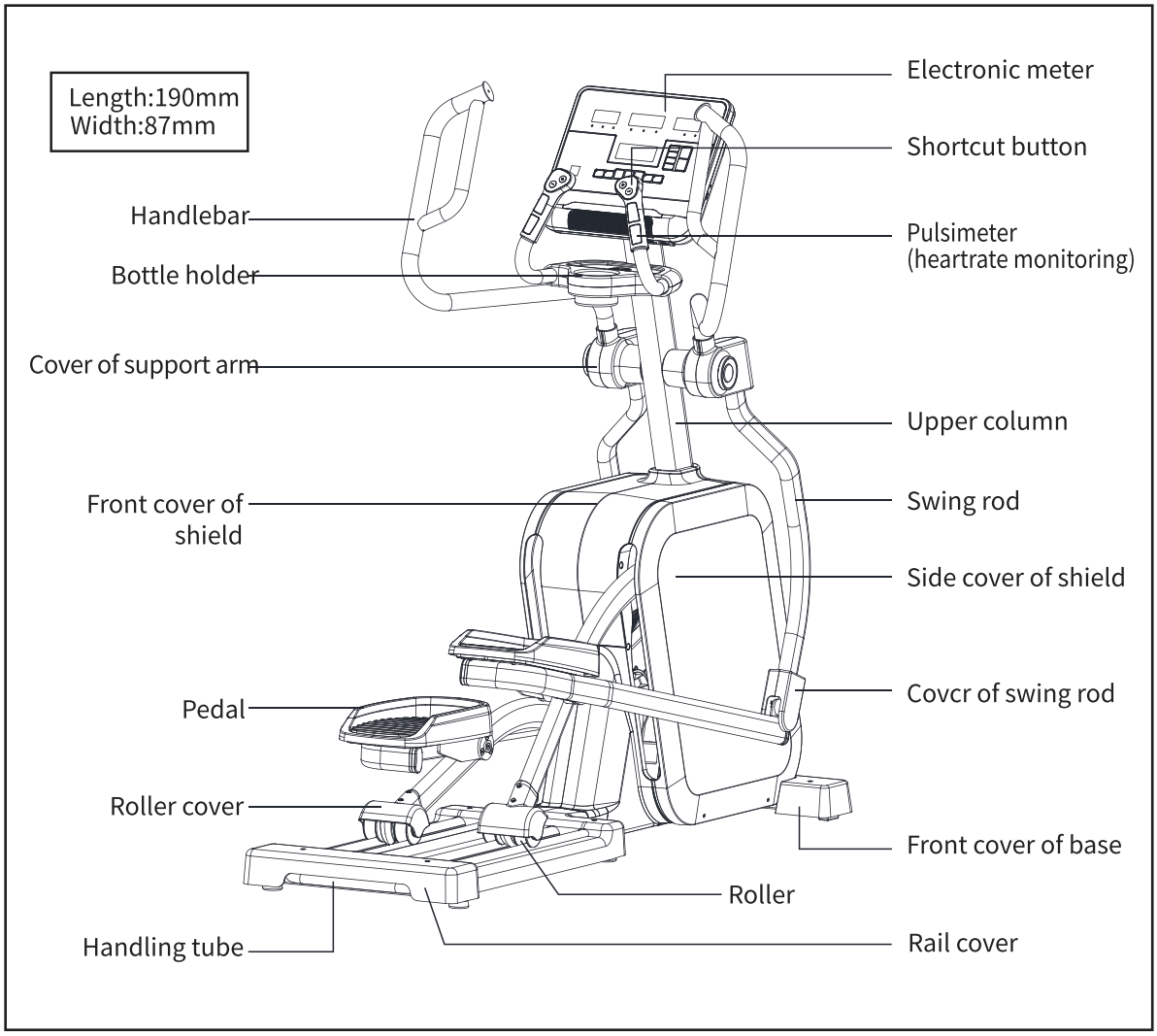

Part Details

This page shows schematic diagrams of parts (screwdrivers, gaskets, nuts, etc.), so that you can distinguish their names, specifications and quantities during installation (some parts have been pre-locked; refer to installation steps).

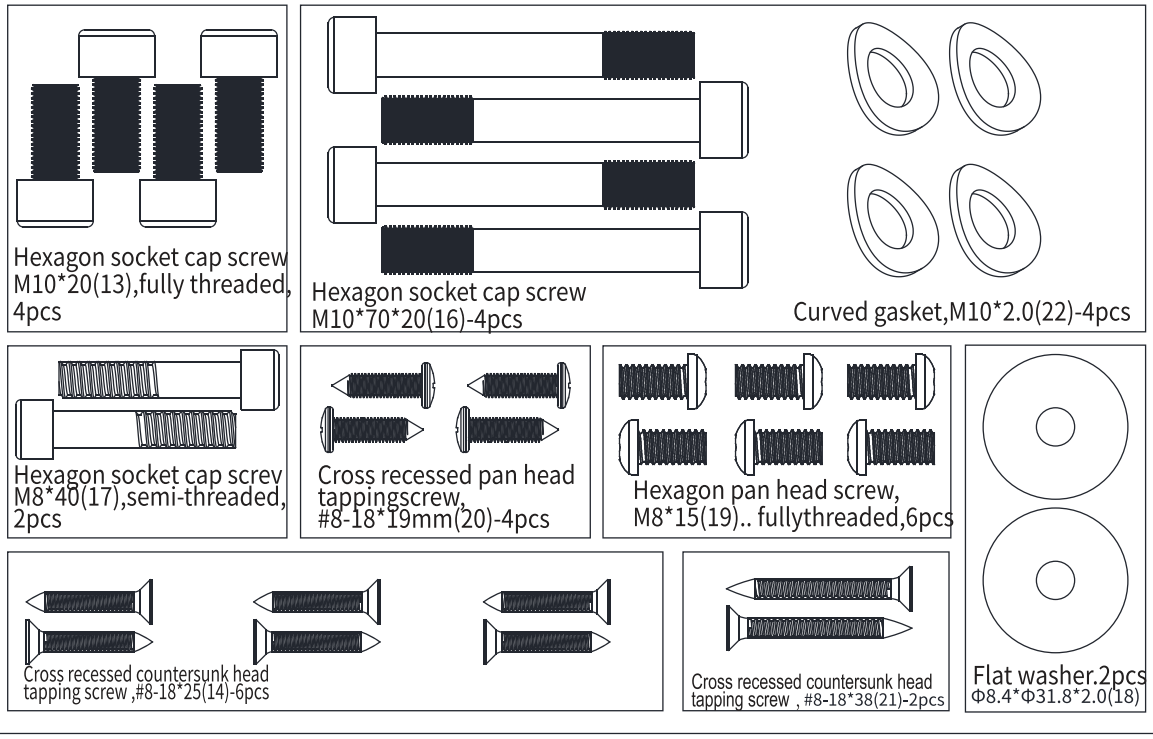

Installation

Refer to the assembly diagram below for accurate installation by part numbers.

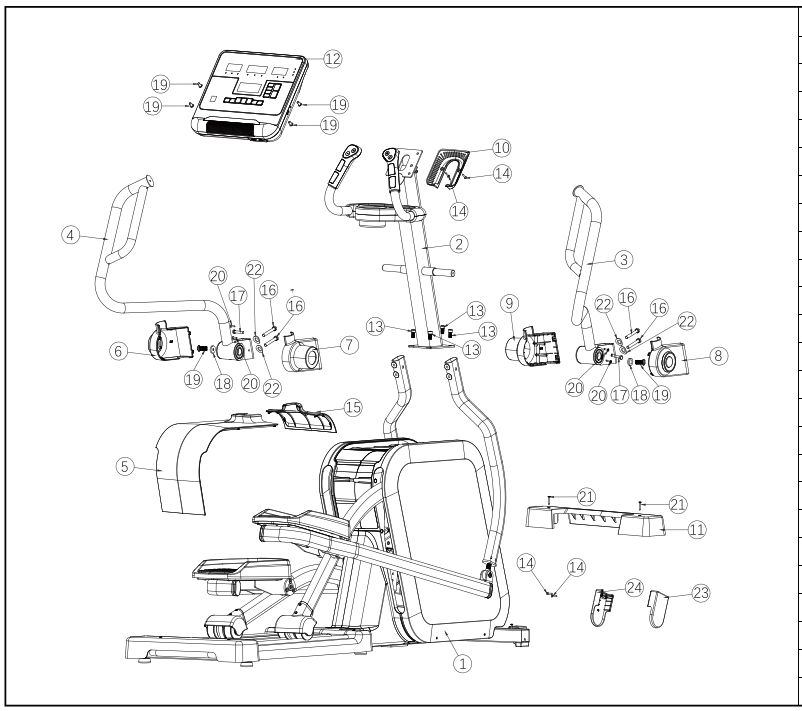

序号	品　名	数量
1	Base assembly	1
2	Upper column assembly	1
3	Right handlebar assembly	1
4	Left handlebar assembly	1
5	Front cover of shield	1
6	Lcft outer cover of support arm	1
7	Lcft inner cover of support arm	1
8	Right outer cover of support arm	1
9	Right inner cover of support arm	1
10	Lower cover of electronic meter	1
11	Front cover of base	1
12	Console assembly	1
13	Hexagon socket cap screw	4
14	Cross recessed countersunk head tapping screw	2
15	Rear cover of shield	1
16	Hexagon socket cap screw	4
17	Hexagon socket cap screw	2
18	Flat washer	2
19	Hexagon pan head screw	6
20	Cross recessed pan head tapping screw	4
21	Cross recessed countersunk head tapping screw	2
22	Curved gasket	4
23	lower decorative cover of the support arm(interior)	2
24	lower decorative cover of the support arm(exterior)	2

Instructions for Installation

Installation

Some parts have been assembled to facilitate installation.IIt is recommended to read this manual before installation and follow the instructions during installation.

Check the parts in the received package.
(1) Take parts out of bags and put them on the ground.
(2) Keep sufficient space (at least 1.5m) around this product for exercise.

Step 1:

Installation of upper column assembly:

Remove and discard the packing tubes (B) and (C) and 2 screws (A) of the base assembly (1). They are no longer used in subsequent installation.

As shown in Figure (1-1), dismantle the front cover of shield (5) from the base assembly (1), and put it aside for subsequent installation.

As shown in Figure (1-2), one person holds the upper column assembly (2) close to the mounting sheet of the main frame assembly (1), while the other person connects signal cables (F) and (E) in the column. Insert the ends of signal cables into column holes (note: it is forbidden to insert them downward). Move the mounting sheet of the upper column assembly (2) against that of the main frame assembly (1), until holes are aligned. Note: Do not press signal cables. Install four hexagon socket cap screws M10*20 (13) through the column mounting plate, and tighten them.

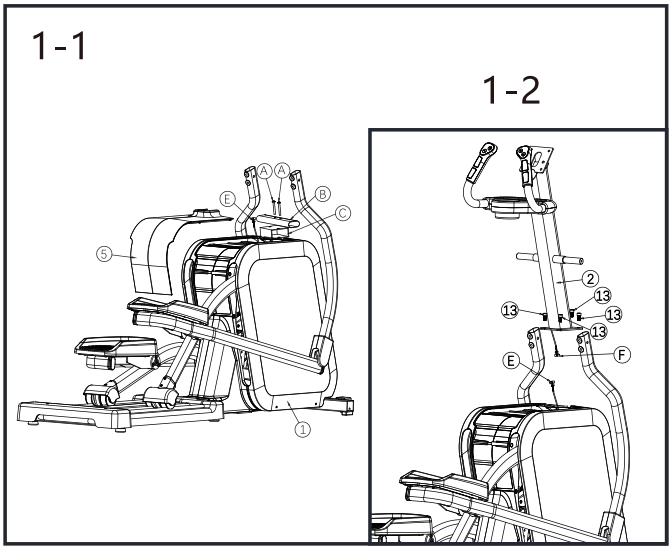

Step 2:

Installation of left and right handlebar assemblies:

Prepare the right handlebar assembly (3), right inner cover of support arm (9), right outer cover of support arm (8), one flat washer (18), two curved gaskets (22), one M8*15mm hexagon pan head screw (19), two #8-18*19mm cross recessed pan head tapping screws (20), one M8*40mm hexagon socket cap screw (17), and two M10*70mm hexagon socket cap screws (16).

As shown in Figure (2-1), insert the right inner cover of support arm into the right axle of the upper column assembly (2).

As shown in Figure (2-2), insert the right handlebar assembly (3) into the right axle of the upper column assembly (2) (leave a space equivalent to the thickness of a bearing). Slowly lift the lower swing rod (G) until three screw holes are aligned. Install two M10*70mm hexagon socket cap screws (16), two curved gaskets (22), and one M8*40mm hexagon socket cap screw (17) into screw holes (without tightening). Then, push the entire right handlebar assembly in place, and tighten two #8-18*19mm cross recessed pan head tapping screws (20), one flat washer (18), and one M8*15mm M8*15mm hexagon pan head screw (19) in turn. Finally, tighten the three hexagon socket cap screws.

As shown in Figure (2-3), align the right outer cover of support arm (8) with the right inner cover (9), and fit them by hand when clips are fully aligned.

Install the left handlebar assembly in the same way.

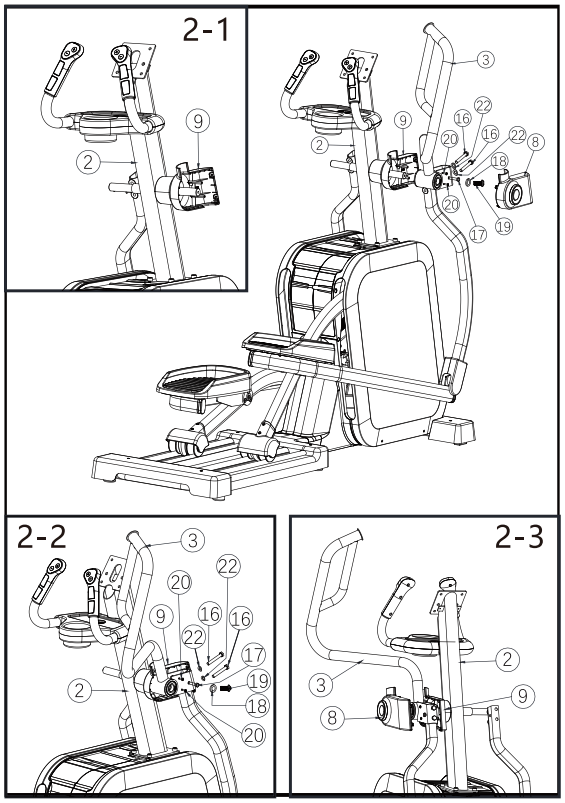

Step 3:

Installation of the lower decorative cover of the support arm:

Find the inner part (with two screw holes) and outer part (23) of the two lower arm trim covers, respectively.

As shown in Figure (3): First install the inner part (24) of the lower decorative cover of the support arm, align the inner part (24) of the lower decorative cover of the support arm with the two holes of the swing rod assembly (G) and stick it flat on the pipe surface, then buckle the outer part (23) of the lower decorative cover of the support arm together, and finally lock it with two cross recessed countersunk head tapping screws # 8-18 * 25 (14).

Install the left side in the same way.

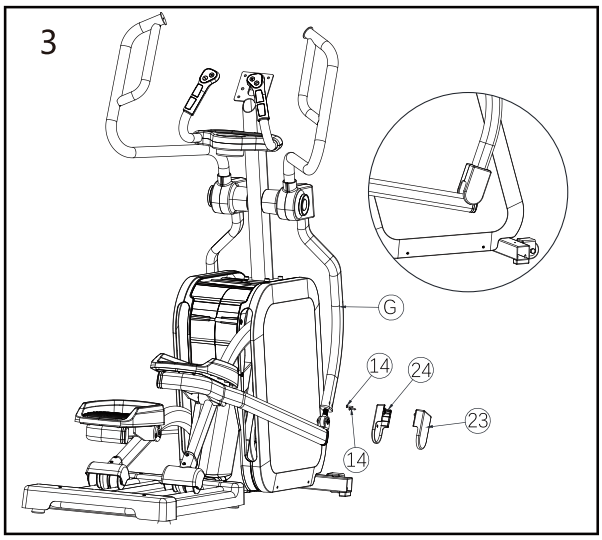

Step 4:

Installation of Front/Rear cover of main chain cover

Locate the shroud front and rear trim covers(5)and(15)respectively

As shown in Figure(4):Install the rear cover(15)first align the rear cover(15)with the position on the left and right cover clamp bars of the chassis assembly(1),press down to flatten and push forward to tighten the clamp.

Then install the front cover of main chain cover (5),align the front cover of the guard (5)with the position of the left and right cover clamp bars of the chassis assembly (1),press down and push the clamp forward until the left and right guard and the back cover of the guard are flat.

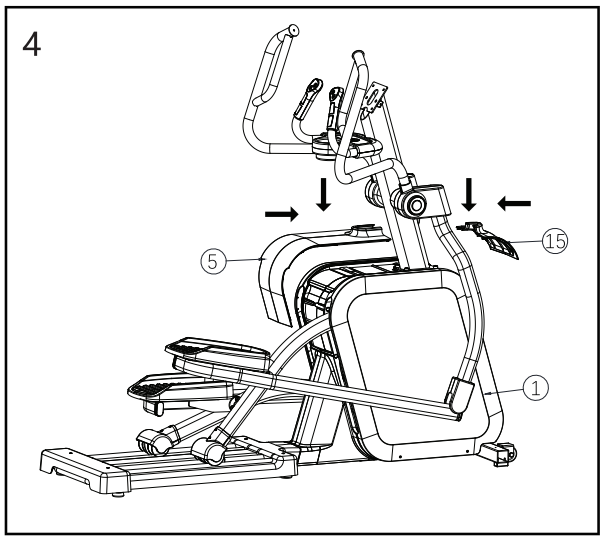

Step 5 :

Installation of console assembly:

Prepare the console assembly (12).

As shown in Figure (4), place the console assembly near the upper column assembly (2). Connect communication cables (A) to (a), and then connect heart rate sensor cables (B) to (b), (C) to (c), (D) to (d), (E) to (e) and (F) to (f) (see Figure 4-1 for details).

Note: Appropriate terminals can be connected easily. Never forcibly connect inappropriate terminals.

Insert terminals into holes of the upper sheet of the upper column assembly (2) to avoid pressure on signal cables.

Put the console assembly (12) on the large sheet of the upper column assembly (2), and align holes. Tighten it with four fully-threaded hexagon pan head screws M8*15 (19).

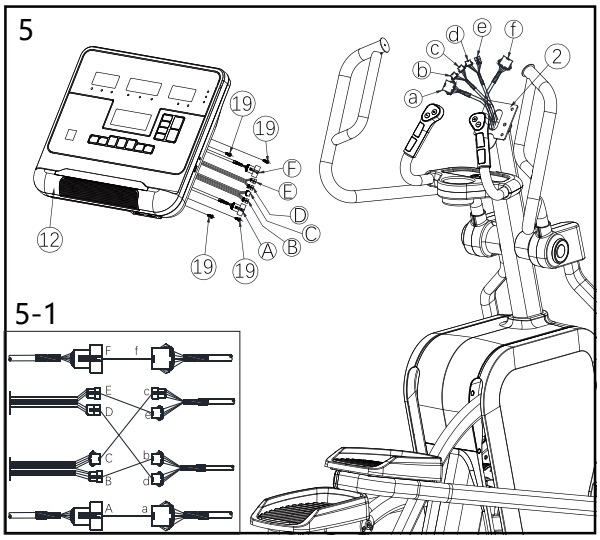

Step6 :

Installation of the lower cover of electronic meter:

Prepare the lower cover of electronic meter (10).

As shown in Figure (5), prepare two cross recessed countersunk head tapping screws #8-18*25 (14).

Clamp the lower cover of electronic meter (10) into the upper column assembly (2), until its holes are aligned with those of the fixing plate. Tighten it with two cross recessed countersunk head tapping screws #8-18*25 (14).

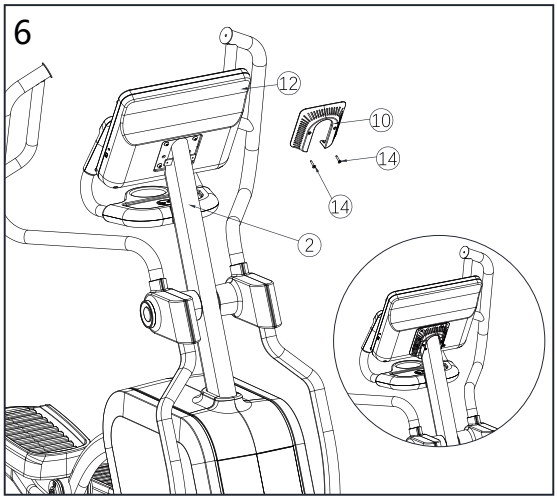

Step7 :

Installation of the front bottom tube cover:

Prepare the front bottom tube cover (11) and two #8-18*38 cross recessed countersunk head tapping screws (21).

As shown in Figure (6), align the bottom tube cover with the front bottom tube of the base assembly (1), put it forward and then press it in place.

As shown in Figure (6-1), tighten two #8-18*38 cross recessed countersunk head tapping screws (21) into the screw holes of the front bottom tube cover (11).

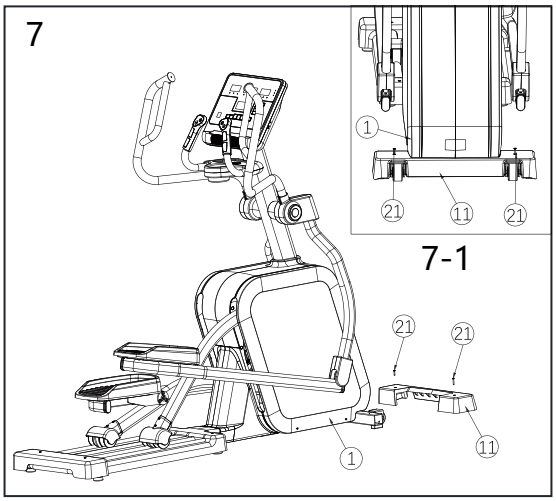

Maintenance Guide

Tips for handling: Lift the tube indicated in the figure.

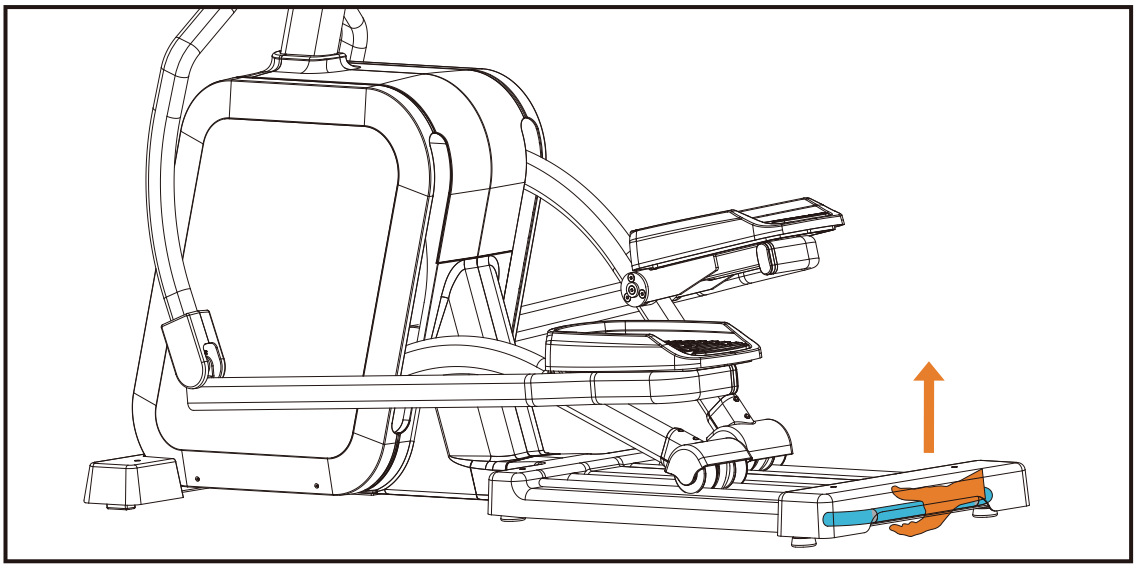

Oil bottle usage:

The track and pulley of this elliptical machine need to be coated with lubricating silicone oil after installation. There may be dust accumulation on the pulley during operation between the pulley and the track, causing slight material movement during the elliptical machine operation. Therefore, it is necessary to regularly clean the pulley and apply lubricating silicone oil. We recommend regular inspections of the pulleys, preferably daily cleaning of the pulleys and slides. It is recommended to add lubricating silicone oil to the pulleys and slides according to the following schedule (for reference only): * Lightweight users (less than 3 hours per week) every 2 months * Medium users (3-6 hours per week) every 1 month * Heavy users (over 6 hours per week) every half a month

We suggest that you purchase lubricating silicone oil from your local distributor or directly contact our company. If there is abnormal sound at the universal joint and the connecting shaft core, it is necessary to remove the lower trim covers (B) and (C) of the support arm first, place them aside together with the upper screws (A), then remove the screws and nuts (D) on the universal joint, place them aside (E), and evenly apply a small amount of oil on the surface of the connecting shaft core and the spherical surface of the universal joint. Then clip the universal joint into the U-shaped plate, lock it with screws (D) and nuts (E), and finally lock the lower trim covers (B) and (C) of the support arm with two screws (A). The left and right sides are oiled in the same way.

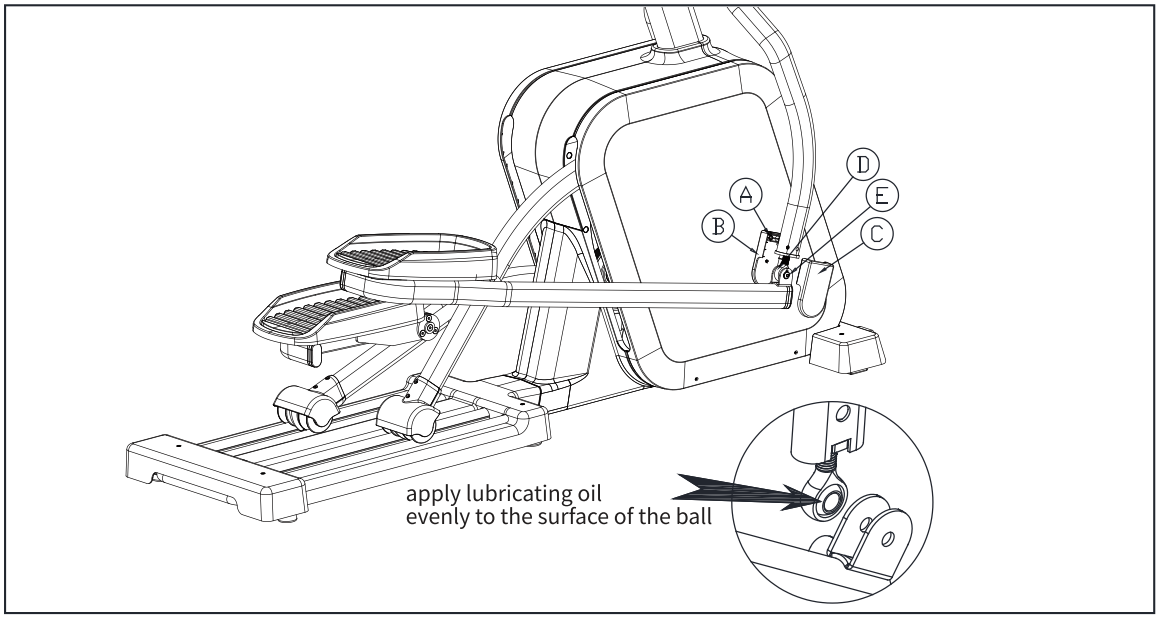

Connection between Electronic Meter and Body

1. Remove fasteners before assembling the frame. Refer to the frame assembly steps in the manual.

2. Connect cables as follows and tighten them with fasteners.

S/N	Schematic Diagram of Cable A		Schematic Diagram of Cable B	
1	Communication cable _ meter segment	SM_2.5_ 5 A	SM_2.5_ 5Y	Communication cable _ meter joystick segment
2	Handheld heart rate sensor cable _ meter segment	(SM_2.5_2A) x2	(SM_2.5_2Y) x2	Handheld heart rate sensor cable _ meter joystick segment
3	Quick resistance sensor cable _ meter segment	(SM_2.5_3A) x2	(SM_2.5_3Y) x2	Quick resistance sensor cable _ meter joystick segment
4	Wireless heart rate s ensor cable _ meter segment	XH_3A	XH_3Y	Wireless heart rate sensor cable _meter joystick segment

Keys of Electronic Meter

1. Start/Pause: press it in the standby mode to enable the Manual mode. Or, press it in the Manual mode to enable the pause mode.

2. Stop: Press it (in the Manual/Pause/Setting mode) to enable the stand-by mode.

3. Change Display: Press it to display the speed, RPM, power, time, calories, distance, heart rate and resistance information in cycles.

4. Resistance +: In the exercise mode, press it to increase the resistance by one level, or press and hold it to increase the resistance rapidly. In the setting mode, press it to increase the set value, or press and hold it to increase the set value rapidly. In the engineering mode, press it to restore default parameters.

5. Resistance -+: In the exercise mode, press it to decrease the resistance by one level, or press and hold it to decrease the resistance rapidly. In the setting mode, press it to decrease the set value, or press and hold it to decrease the set value rapidly. In the engineering mode, press it to restore default parameters.

7. Interval: Press it in the standby mode to enable the constant watt mode.

7. Interval: Press it in the standby mode to enable the interval mode.

8. Fat Burn: Press it in the standby mode to enable the fat burn mode.

9. Cardio: Press it in the standby mode to enable the cardio mode.

10. Resistance shortcut: Press it in the exercise mode to discharge change resistance to Level 8.

11. Resistance shortcut: Press it in the exercise mode to discharge change resistance to Level 16.

12. Resistance shortcut: Press it in the exercise mode to discharge change resistance to Level 24.

13. Resistance shortcut: Press it in the exercise mode to discharge change resistance to Level 32.

14. Resistance adjustment key of handlebar:with the same functions as those of ▲ and ▼ on the electronic meter.

Program Description

1. Information displayed in the standby mode

Speed window: 0.0 (km/h)

Time window: 0:00 (h)

Resistance level window: L0.

Matrix window: “Welcome”

2. Manual mode

A. Press Start/Pause in the standby mode to enable the manual mode.

B. By default, the left window shows the speed, the middle window shows the time, the right window shows the resistance level, and the matrix window shows the same information as the middle window.

C. During exercise

- Press the Start/Pause key to enable the pause mode or restore the exercise mode. If you press Pause, the screen will show “P2:00”, which will last for 2min. The product will be powered off if you do not restart it.
- Press the Resistance + key to increase the resistance by one level. Or, press and hold it to continuously increase the resistance (adjustment range: L1-L32). Press the Resistance - key to decrease the resistance by one level. Or, press and hold it to continuously decrease the resistance (adjustment range: L1-L32).
- Press resistance shortcuts “ 8 16 24 32 ” to directly set the corresponding resistance level.
- Press the Stop key to enable the standby mode. All data will be reset to 0.
- Press the Change Display key .

  The left window will show the speed, RPM and watt values in turn.

  The middle window will show the time, distance and calories in turn.

  The right window will show the resistance level and hear rate in turn.

  The matrix window will show the same information as the middle window.

3. P1 constant watt mode

If you press the Constant Watt key in the standby mode, the matrix window will show a prompt: “P1- Constant Watt”.

Press the Change Display key to enter the initial setting interface:

The constant watt mode lasts for 30min by default.

Press the resistance +/- or shortcut keys to adjust the time (20:00-99:00) by 5min at a time.

- Press the Change Display key to enter the watt adjustment interface. The constant watt mode is preset to 80W.
- Press the resistance +/- keys to adjust the watt value (50-300), 5W at a time.
- Press the Start/Pause key to enable the exercise mode.
  Resistance is not adjustable in the exercise mode.

- Press the Start/Pause key to enable the pause mode or restore the exercise mode. If you press Pause, the screen will show “P2:00”, which will last for 2min. The product will be powered off if you do not restart it.
- Press the Stop key to enable the standby mode. All data will be reset to 0.
- Press the Change Display key:

  The left window will show the speed, RPM and watt values in turn.

  The middle window will show the time, distance and calories in turn.

  The right window will show the resistance level and hear rate in turn.

  The matrix window will show the same information as the middle window.

4. P2 interval mode

Press the Interval key in the standby mode. The matrix window will show a prompt: “P2- Interval”.

- Press the Change Display key to enter the setting interface.

The default time of the interval mode is 55min. In the interval mode, the initial resistance level is L10, as described below.

Interval Mode					
Level	1 (4min)	2 (4min)	3 (10min)	4 (5min)	5 (10min)
Resistance	3	5	Set value	5	Set value
Level	6 (5min)	7 (10min)	8 (5min)	9 (margin)	10 (8min)
Resistance	5	Set value	5	Set value	3

- Press the resistance +/- keys to adjust the time (40:00-99:00) by 5min at a time.
- Press the Change Display key to enter the resistance level adjustment interface.
- Press the Resistance + key ▲ or Resistance - key ▼ to adjust the resistance level (1-32), one level at a time.
- Press the Start/Pause key to enable the exercise mode.

  Similar to the Manual mode, the resistance level can be adjusted in the exercise mode.

  Press the Start/Pause key to enable the pause mode or restore the exercise mode. If you press this key again, the screen will show “P2:00”, which will last for 2min. The product will be powered off if you do not restart it.

  Press the Stop key to enable the standby mode. All data will be reset to 0.

- Press the Change Display key:
  The left window will show the speed, RPM and watt values in turn.
  The middle window will show the time, calories and distance in turn.
  The right window will show the resistance level and hear rate in turn.
  The matrix window will show the same information as the middle window.

5. P3 fat burn mode

Press the Fat Burn key in the standby mode. The screen will show a prompt: “P3-Fat Burn”.

- Press the Change Display key to enter the setting interface.

  The default time of the fat burn mode is 30min.

  The default age of the fat burn mode is 30 years.

  The default heart rate of the fat burn mode is 65% of the maximum heart rate. Formula: (220-30)*65%=124.

- Press the Resistance + key ▲ or Resistance - key ▼ to adjust the time (20:00-99:00) by 5min at a time.

- Press the Change Display key to enter the age adjustment interface.

- Press the Resistance + key ▲ or Resistance - key ▼ To adjust the age (15-80) by a year at a time.

- Press the Start/Pause key to enable the exercise mode.

  Similar to the Manual mode, the resistance level can be adjusted in the exercise mode.

- Press the Start/Pause key to enable the pause mode or restore the exercise mode. If you press this key again, the screen will show “P2:00”, which will last for 2min. The product will be powered off if you do not restart it.
- Press the Stop key to enable the standby mode. All data will be reset to 0.
- Press the Change Display key.:

  The left window will show the speed, RPM and watt values in turn.

  The middle window will show the time, distance and calories in turn.

  The right window will show the resistance level and hear rate in turn.

  The matrix window will show the same information as the middle window.

Note:

The user' s heart rate will be detected and determined in the first three minutes in this mode. In these three minutes, the heart rate mode will not be enabled, and the resistance level can be adjusted manually. After 3min, the heart rate mode will be enabled, in which target values are the set value equivalent to 65% of the maximum heart rate and 75 beats per minute. If no heart rate is detected in 1min, the system will return to the standby mode.

1) If the detected heart rate is lower than the target value and the step frequency is lower than 75 times/min for 5 consecutive seconds, the resistance will be decreased by one level.

2) If the detected heart rate is lower than the target value and the step frequency is higher than 75 times/min for 5 consecutive seconds, the resistance will be increased by one level.

3) If the detected heart rate is higher than the target value and the step frequency is lower than 75 times/min for 5 consecutive seconds, the resistance will be increased by two levels.

4) If the detected heart rate is higher than the target value and the step frequency is higher than 75 times/min for 5 consecutive seconds, the resistance will be increased by two levels.

6. P4-Cardio mode

If you press the Cardio key in the standby mode, the matrix window will show a prompt: "P4-Cardio".

- Press the Change Display key to enter the setting interface:
- The default time of the cardio mode is 30min.
- The default age of the cardio mode is 30 years.
- The default heart rate of the cardio mode is 85% of the maximum heart rate. Formula: (220-30)*85%=162.
- Press the Resistance + key ▲ or Resistance - key ▼ to adjust the time (20:00-99:00) by 5min at a time.
- Press the Change Display key to enter the age adjustment interface.
- Press the Start/Pause key to enable the exercise mode.

Similar to the Manual mode, the resistance level can be adjusted in the exercise mode.

Press the Start/Pause key to enable the pause mode or restore the exercise mode. If you press this key again, the screen will show "P2:00", which will last for 2min. The product will be powered off if you do not restart it.

Press the Stop key to enable the standby mode. All data will be reset to 0.

Press the Change Display key. The left window will show the speed, RPM and watt values in turn.

The middle window will show the time, calories and distance in turn.

The right window will show the resistance level and hear rate in turn.

The matrix window will show the same information as the middle window.

Note:

The user' s heart rate will be detected and determined in the first three minutes in this mode. In these three minutes, the heart rate mode will not be enabled, and the resistance level can be adjusted manually. After 3min, the heart rate mode will be enabled, in which target values are the set value equivalent to 85% of the maximum heart rate and 75 beats per minute. If no heart rate is detected in 1min, the system will return to the standby mode.

1) If the detected heart rate is lower than the target value and the step frequency is lower than 75 times/min for 5 consecutive seconds, the resistance will be decreased by one level.

2) If the detected heart rate is lower than the target value and the step frequency is higher than 75 times/min for 5 consecutive seconds, the resistance will be increased by one level.

3) If the detected heart rate is higher than the target value and the step frequency is lower than 75 times/min for 5 consecutive seconds, the resistance will be increased by two levels.

4) If the detected heart rate is higher than the target value and the step frequency is higher than 75 times/min for 5 consecutive seconds, the resistance will be increased by two levels.

Other Functions

1. Press the Stop key at anytime to return to the standby mode.

2. If the RPM is less than 10 or no key is pressed for 10 consecutive seconds in the exercise mode, the system will return to the Pause mode.

3. If the RPM is less than 10 or no key is pressed for two consecutive minutes in the pause mode, the system will return to the standby mode.

4. If the RPM is less than 10 or no key is pressed for 60 consecutive seconds in the non-exercise mode, the system will be in the Ready Sleep mode, and one “ball” will move in the matrix window. You can enable the system by stepping or pressing any key.

5. If one “ball” is moving in the interface and the RPM is less than 10 in 60s in the Ready Sleep mode, the electronic meter will send a power-off command to the controller and change to the power-off status.

6. If you press the Change Display key in the standby mode, the right window will alternately show the resistance level and heart rate (the heart rate Bluetooth is disabled in the engineering mode).

7. Engineering mode

a. Full display and key test mode. In the standby mode, press and hold the Change Display key and resistance shortcut key “24” for 5s to enable the full display mode, and all LED indicators will be normally ON. In this case, you can test any key by pressing it and checking whether its code is displayed.

b. Total distance and total time mode. In the standby mode, press and hold the Change Display key and resistance shortcut key “16” for 5s to enable the total distance and total time mode. The 1-inch digital tube in the upper right window will show the running distance (km/mile), while the matrix window will show the running time (hour). Press and hold the Change Display key and resistance shortcut key “16” for 5s again to clear such data.

c. If no key is pressed for 10s in the engineering mode, the system will return to the standby mode.

8. Heart rate display

a. Start the elliptical trainer correctly and hold the sensors on the left and right handlebar for at least 30s. Heart rate range: (HR: 50-200), for reference only. The detected heart rate cannot be deemed as medical data.

b. Start the elliptical trainer correctly and wear the chest band (frequency: 5.3KHZ). The electronic meter will show the heart rate. Heart rate range: (HR: 50-200), for reference only. The detected heart rate cannot be deemed as medical data.

Guide

I. Guide for exercise

Recommended stretching exercise

Correct postures of some stretching exercises are shown below. Stretch yourself slowly.

1. Stretching by touching toes

Stand with knees bent slightly, and keep the part above hips moving up and down. Touch toes as much as possible without tensioning your back and shoulders. Keep this posture for 15s and then relax yourself. Repeat this exercise three times. Stretches: ligaments, inner knees and back.

2. Ligament stretching

Sit down with one leg extended forward. Move the sole of the other foot against your body and on the inner thigh of your outstretched leg. Touch your toes as far forward as you can. Keep this posture for 15s and then relax yourself. Repeat this exercise three times for both legs.

Stretches: ligaments, back and groin.

3. Calf/heel stretching

Stand with one left in front of the other, lean forward and put your hands against a wall. Straighten the rear leg and keep the foot flat on the floor. Bend the front leg, lean forward, and move your hips toward the wall. Keep this posture for 15s and then relax yourself. Repeat this exercise three times for both legs.

Bend the rear leg to further stretch the Achilles tendon.

Stretches: Calves, Achilles tendons and ankles.

4. Quadriceps stretching

Keep balance with one hand against a wall and the other hand grabbing your foot. Move the heel as close to your hips as possible. Keep this posture for 15s and then relax yourself. Repeat this exercise three times for both legs.

5. Inner thigh stretching

Sit down with feet facing each other and knees outward. Pull the feet as close to the groin area as possible. Keep this posture for 15s and then relax yourself. Repeat this exercise three times.

Stretches: Quadriceps and hip muscles.

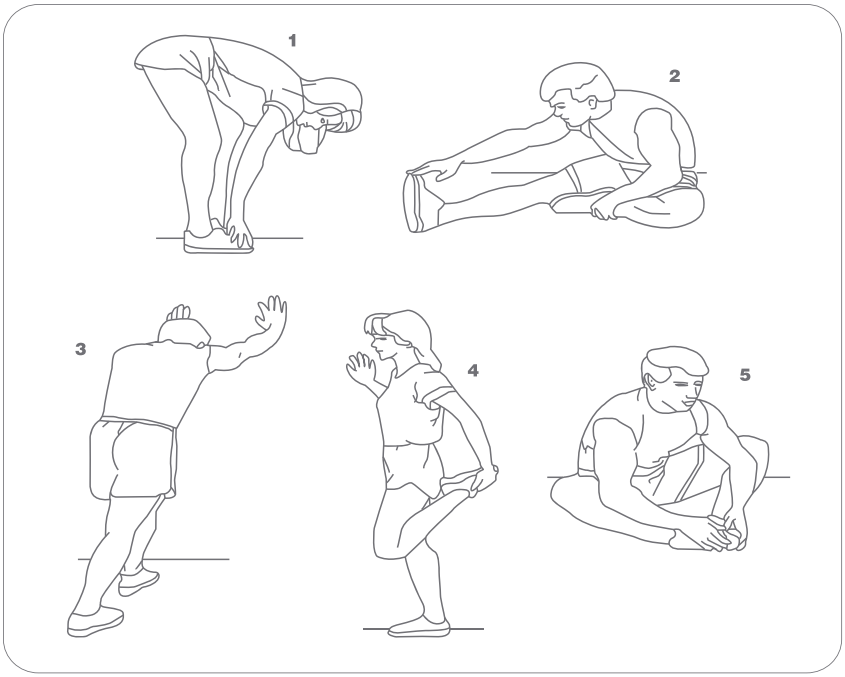

II. How to improve exercise effects

Like muscle building, aerobic exercise also involves a higher blood flow rate and heart rate, thus improving the cardiovascular system. The heart rate is generally measured by pulses. Exercise will be safe and effective if your pulses are below the maximum exercise target level. The exercise target range is 72% to 87% of the maximum heart rate. You should develop exercise plans to gradually increase target values, and do exercise at least 3-4 times per week and 15-20min at a time.

Warning: Do not exercise with the heart rate above the maximum target value. Instead, you should exercise gradually. Users with any medical history should seek medical advice. For users aged 35-40 without regular exercise, it is recommended to follow medical advice. Take a few minutes to warm up and cool down (as shown in Figure B).

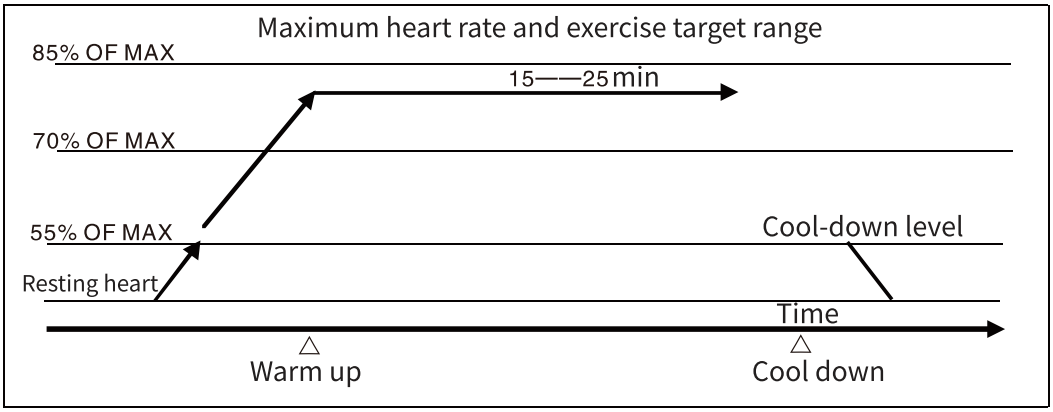

Figure B

III. Maintenance and troubleshooting

1. Regularly check whether screws and nuts are tightened, whether knobs are locked, whether rotating parts are flexible and whether some parts are worn or damaged. Keep these parts in good conditions to ensure the product safety.

2. In case of any worn or damaged parts, repair them immediately or send to the maintenance center for replacement or repair.

3. Keep this product clean. Do not wipe it with acid, alkaline or organic solution.

4. Faults and solutions:

Fault	Cause	Solution	Remarks
Instable frame	1. Uneven ground or debris 2. No base leveling in frame assembly	1. Remove debris. 2. Loosen connecting bolts, level the base and tighten the bolts. 3. Adjust the eccentric sleeve of the rear bottom tube.	User
Instable handlebar	Loose screw	Tighten screws.	User
Abnormal noise of rotating part	Inappropriate gap	Open the shield and adjust the gap.	Service Center
Poor rotation	1. Increase in reluctance gap 2. Damaged trimmer	1. Open the shield and adjust it. 2. Replace it. 3. Open the shield and adjust it.	Service Center

IV. Heart rate management

Determine the age on the abscissa axis and find the heart rate target zone, as shown in Figure C.

Example: For a user aged 40, 72% of the maximum heart rate is 133 beats per minute and 87% of the maximum heart rate is 161 beats per minute.

Keep the heart rate within the optimal target zone.

(1) If your heart rate is too low, accelerate exercise or increase the intensity.

(2) If your heart rate is too high, reduce exercise or intensity.

(3) If your heart rate is still far from the set value, but you feel unwell, reduce the exercise time.

(4) If your heart rate cannot quickly return to normal within 5-10min, reduce the exercise intensity except for any exception.

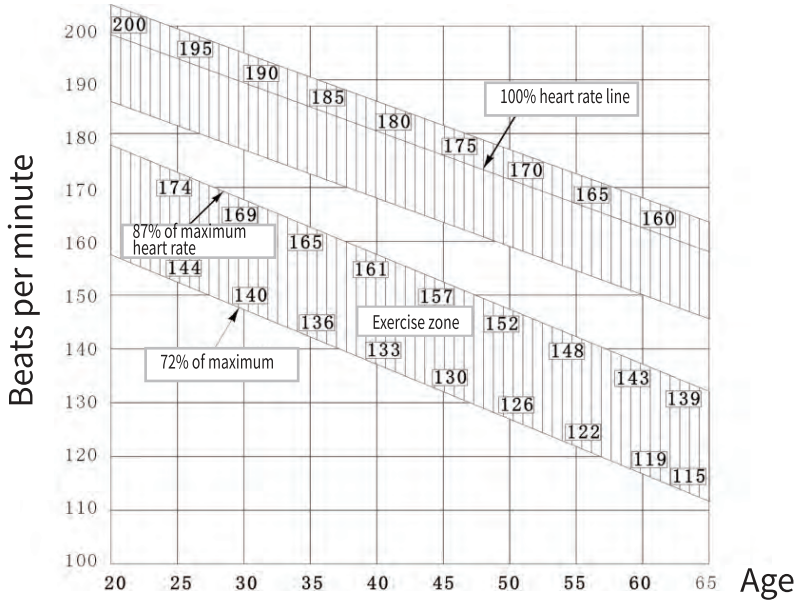

Figure C: Heart Rate Target Zone

Determine the age on the abscissa axis and find the heart rate target zone, as shown in Figure C.

Example: For a user aged 40, 72% of the maximum heart rate is 133 beats per minute and 87% of the maximum heart rate is 161 beats per minute.

Keep the heart rate within the optimal target zone.

(1) If your heart rate is too low, accelerate exercise or increase the intensity.

(2) If your heart rate is too high, reduce exercise or intensity.

(3) If your heart rate is still far from the set value, but you feel unwell, reduce the exercise time.

(4) If your heart rate cannot quickly return to normal within 5-10min, reduce the exercise intensity except for any exception.

Note: The above heart rate management is for reference only. Please consult a doctor for specific data and solutions!!

(5) How to extend the exercise time

① Correct aerobic exercise will keep your heart rate within the exercise zone for at least 12min.

② If the exercise time is more than 60min, effects will decline, while hazards or injuries will increase.

③ To intensify exercise, it is recommended to exercise continuously for at least 12min per week. If you need to extend the exercise time, make sure that it is not extended by more than 10% per week.

④ Do not increase the exercise intensity quickly. Otherwise, you may feel tired after exercise.

(6) Check your fitness level and exercise progress.

You can check your exercise intensity and progress based on heart rate restoration to the normal status. Your heart rate will decline in 1min after you slow down, and return to normal in a few minutes.

(7) Check the exercise effect.

① Measure your heart rate during aerobic exercise.

② Slow down to cool down.

③ Record your heart rate after 60s.

④ Record the time for your heart rate to return to normal.

⑤ Check your exercise intensity in some weeks.

Data Sheet

Name	Commercial elliptical trainer	Model	SH-E800
Size (mm)	1900x850x1760mm	Allowable weight	≤160kg
Net Weight	130KGS	Category	SB
Allowable number of users	1	Application scope	2700L x 1700W

Standards

1. GB17498.1–2008/ISO20957–1:2005 General Safety Requirements and Test Methods
2. GB17498.9–2008/ISO20957–9:2005 Elliptical Trainers – Additional Specific Safety Requirements and Test Methods
3 Instructions for Use of Products of Consumer Interest – Sports Equipment

The Company reserves the right of technological improvement of product pictures and specifications. These product pictures and specifications may be changed without prior notice.

Handling Instructions

Product movement:

1. Make sure that the product power cord has been unplugged;
2. Please pay attention to the seat sliding when moving, to avoid sliding and causing hand injuries;
3. Due to the heavy weight of the machine, it is recommended to operate by two or more persons;
4. The product is recommended to be placed in a dry place at room temperature. It is not recommended to be placed in a place where balcony lights are prone to exposure to the sun and rain for a long time.