A311501CST safety relief valve

H0006025

Replacement Part Code: A311501CST

Safety Relief Valve suitable for use with 533002 CST and 533003 CST Inlet Control Groups only

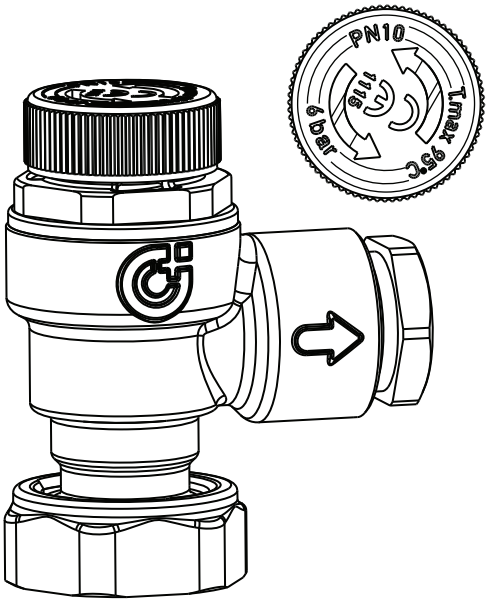

IMPORTANT:

- Only use genuine Caleffi replacement parts.
- The installer needs to ensure the pressure ratings / settings are correct (refer to Altecnic for guidance if necessary).
- Care taken to ensure when fitting that no damage to sealing faces occurs.

altecnic
Caleffi group

SAFETY VALVES ONLINE
01482 601030
www.safetyvalvesonline.com
sales@safetyvalvesonline.com