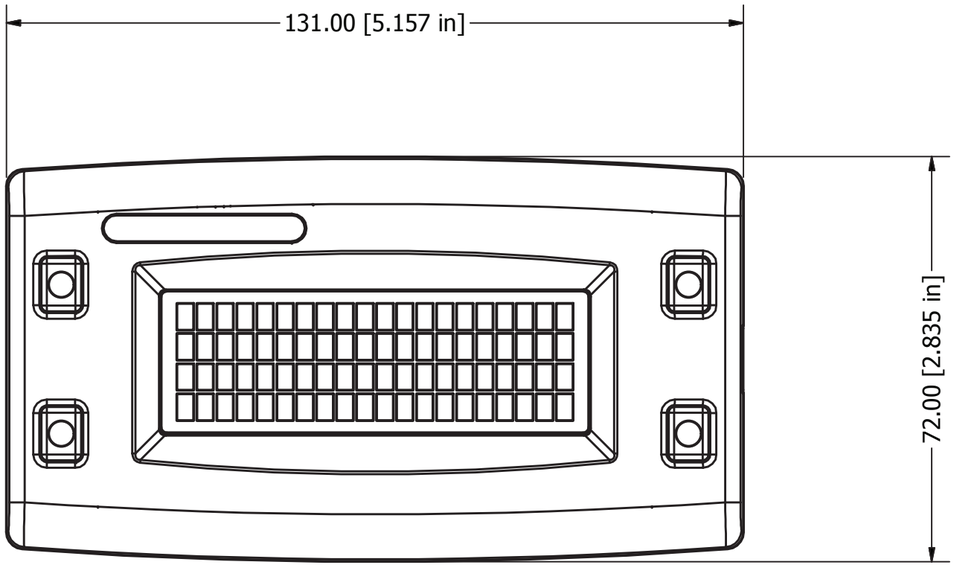
131.00 [5.157 in]
72.00 [2.835 in]

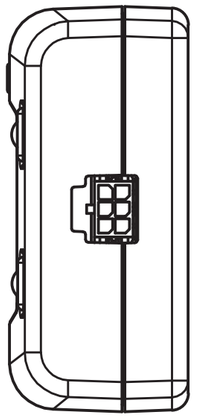

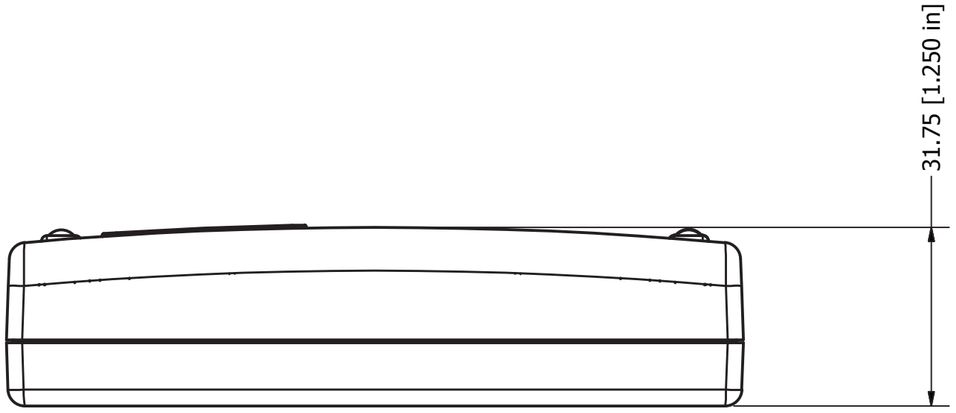
31.75 [1.250 in]

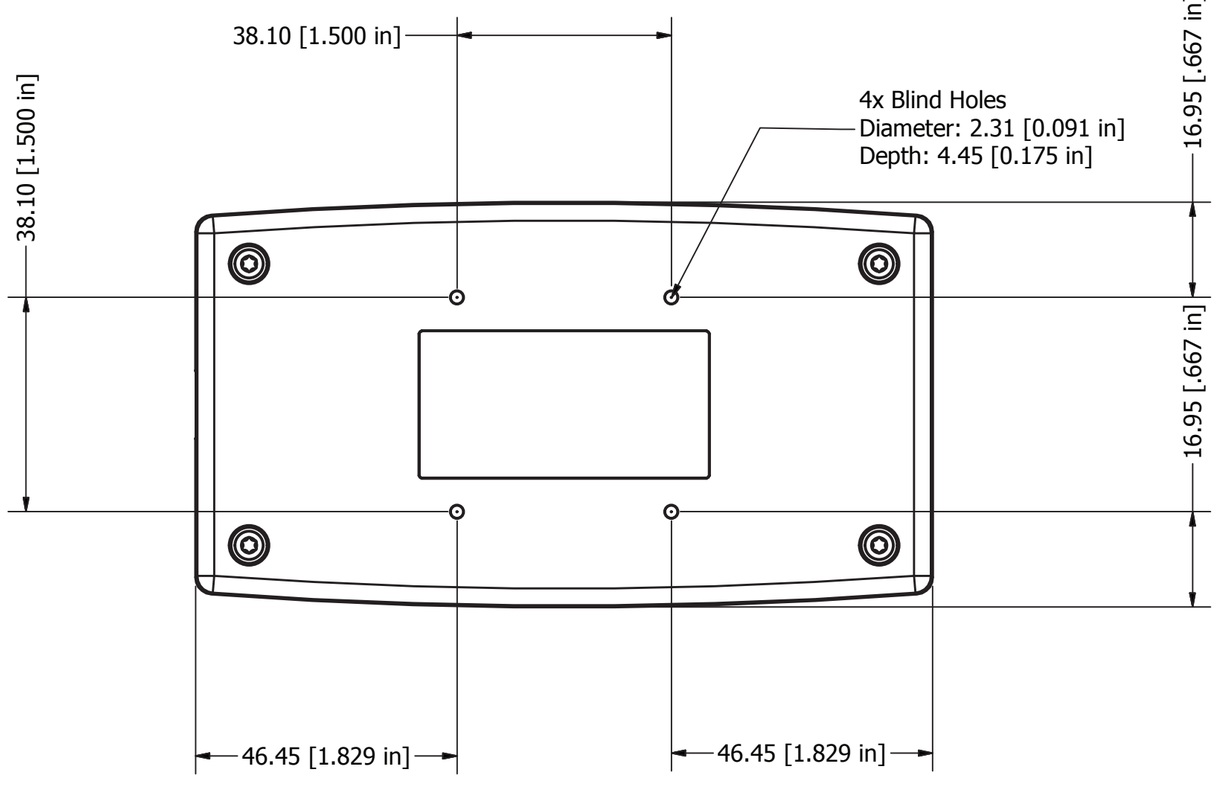
38.10 [1.500 in]
38.10 [1.500 in]
4x Blind Holes
Diameter: 2.31 [0.091 in]
Depth: 4.45 [0.175 in]
16.95 [.667 in]
16.95 [.667 in]
46.45 [1.829 in]
46.45 [1.829 in]