www.acumetalfab.com

REVISIONS				
ZONE	REV.	DESCRIPTION	DATE	APPROVED

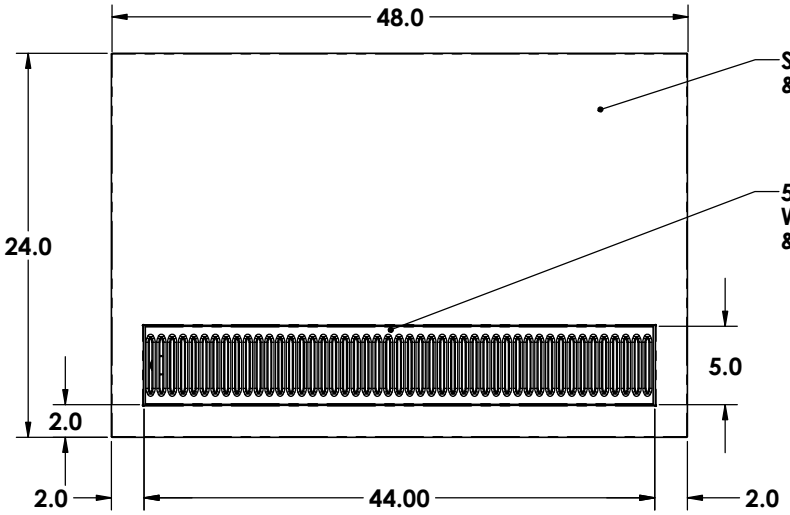

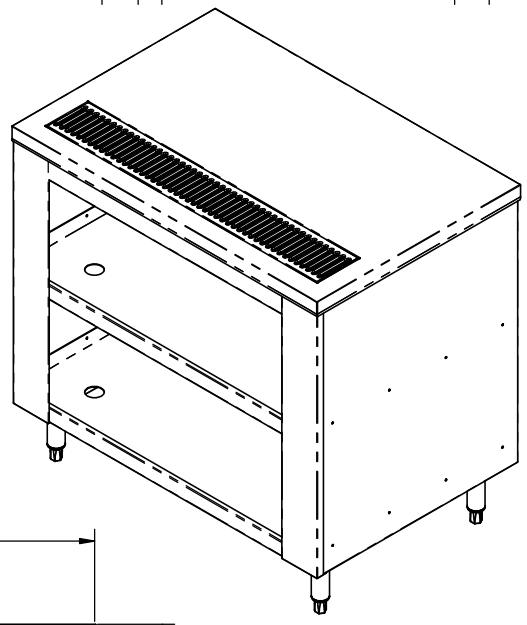

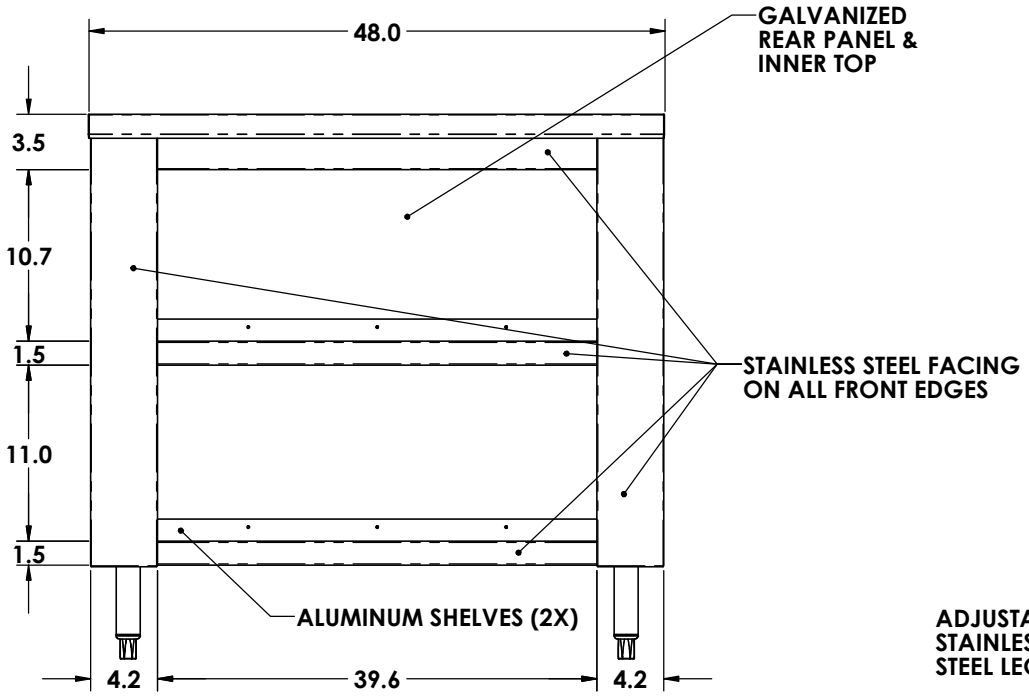

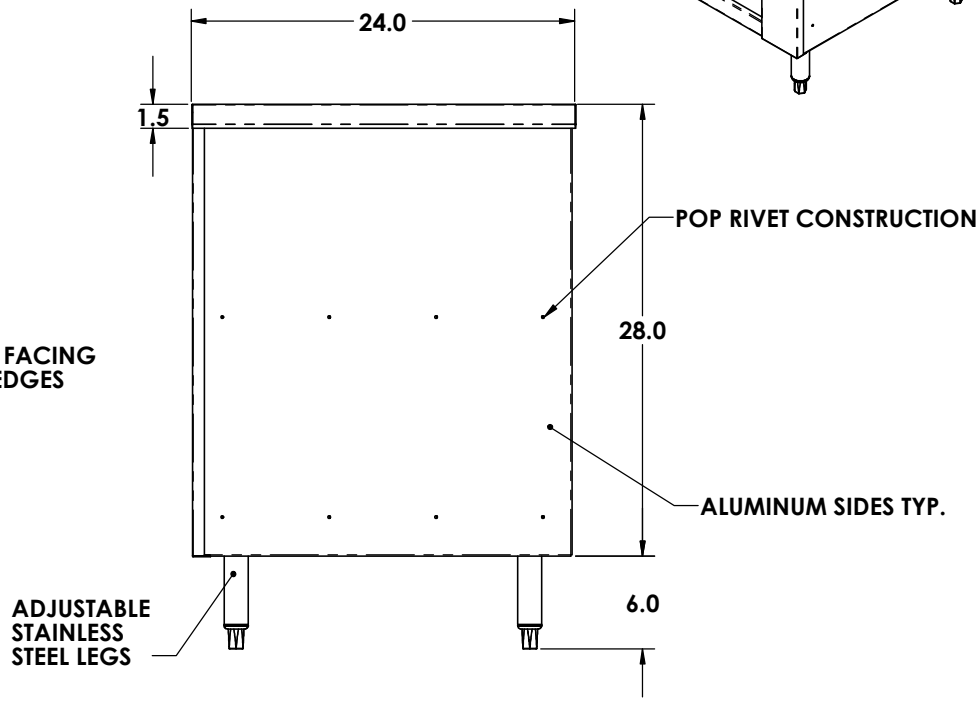

ACU PART# 5511 - LEFT DRAIN

American Coffee Urn Manufacturing Co., Inc.
Since 1959
Precision Sheet Metal
Design ◊ Engineering ◊ Fabrication
www.acumetalfab.com

Proprietary and Confidential
The Information contained in this drawing is the sole property of ACU Precision Sheet Metal. Any reproduction in part or as a whole without the written permission of ACU Precision Sheet Metal is Prohibited.
ACU Precision Sheet Metal is:
American Coffee Urn Manufacturing Co., Inc.

	NAME	DATE
DRAWN	M. Johs	07/14
MATERIAL	SEE NOTES	
FINISH	SEE NOTES	COMMENTS:

DO NOT SCALE DRAWING

TITLE:

48" TABLE W\DRAIN TOP
48"W X 24"D X 28"H
AMERICAN COFFEE URN