American Coffee Urn Manufacturing Co., Inc.
Since 1959
Precision Sheet Metal
Design ◊ Engineering ◊ Fabrication
www.acumetalfab.com

PLEASE FILL IN CORRECT MEASUREMENTS WHERE NEEDED!

REVISIONS				
ZONE	REV.	DESCRIPTION	DATE	APPROVED

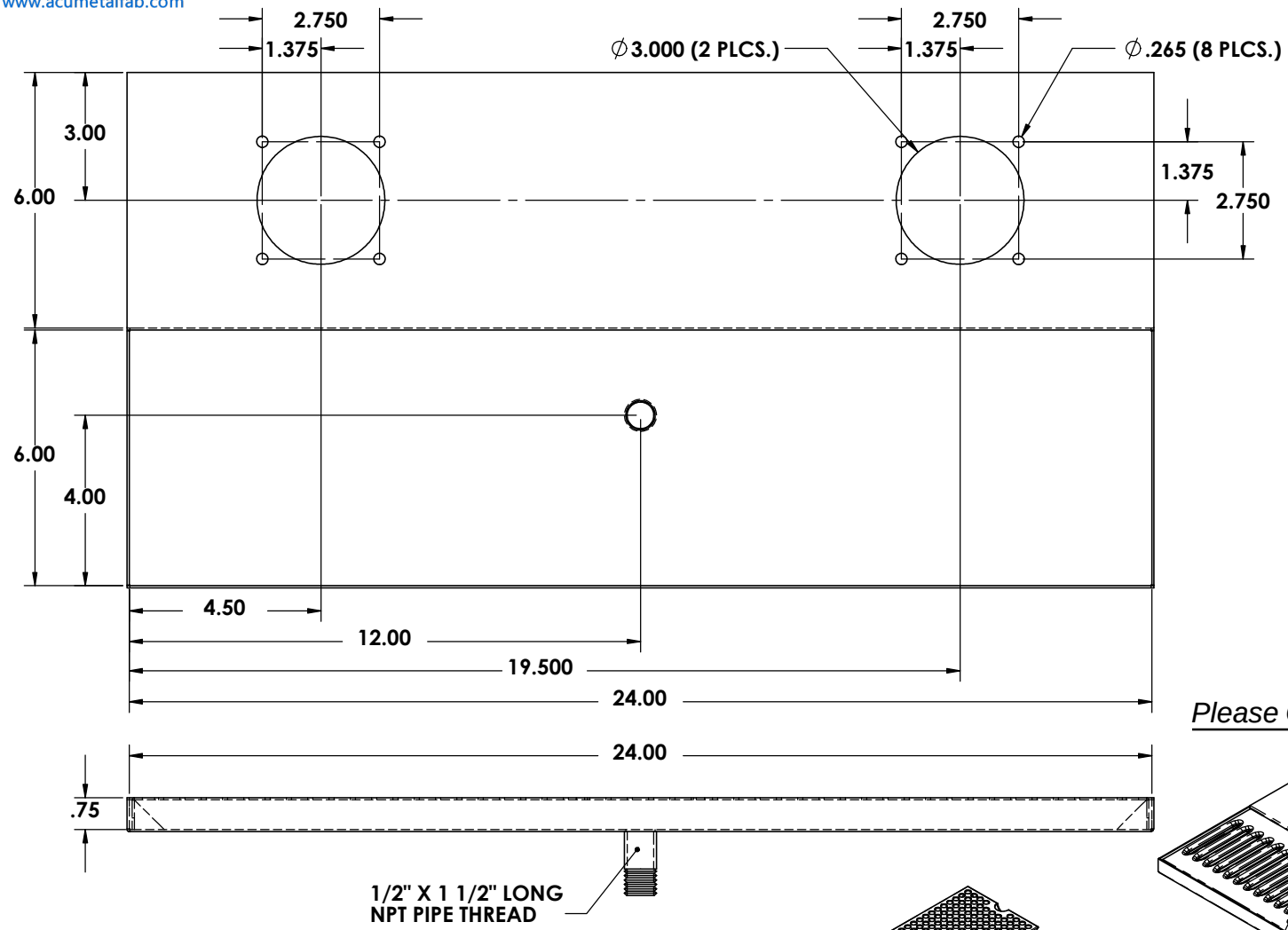

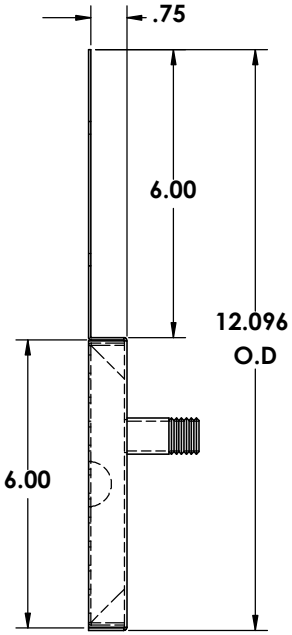

*Please **Circle** the desired Screen Below:*

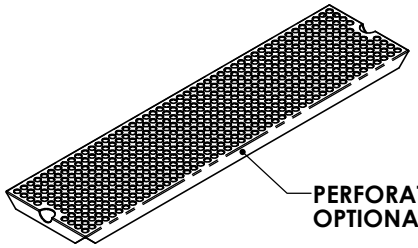

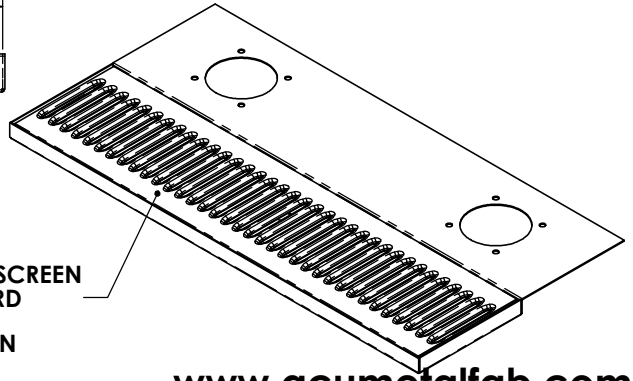

LOUVER SCREEN
STANDARD

PERFORATED SCREEN
OPTIONAL

www.acumetalfab.com

*Please **Circle** the desired options Below:*

ALL DIMENSIONS ARE INSIDE DIMENSIONS
UNLESS OTHERWISE NOTED

MATERIAL :

18 GAUGE STAINLESS STEEL
16 GAUGE BRASS

FINISHES :

#4 BRUSHED ON ALL TYPES
#8 POLISHED ON ALL TYPES

Proprietary and Confidential
The Information contained in this drawing is the sole property of ACU Precision Sheet Metal. Any reproduction in part or as a whole without the written permission of ACU Precision Sheet Metal is Prohibited.
ACU Precision Sheet Metal is:
American Coffee Urn Manufacturing Co., Inc.

	NAME	DATE
DRAWN	M. Johs	07/14
MATERIAL	SEE NOTES	
FINISH	SEE NOTES	COMMENTS:

DO NOT SCALE DRAWING

TITLE:
SMALL STANDARD OVERHANG W/DBL 3" PEDESTAL CUSTOM

AMERICAN COFFEE URN