American Coffee Urn Manufacturing Co., Inc.
Since 1959
Precision Sheet Metal
Design ◊ Engineering ◊ Fabrication
www.acumetalfab.com

CHANGE DIMENSIONS AS NEEDED FOR CUSTOM TRAYS

REVISIONS				
ZONE	REV.	DESCRIPTION	DATE	APPROVED

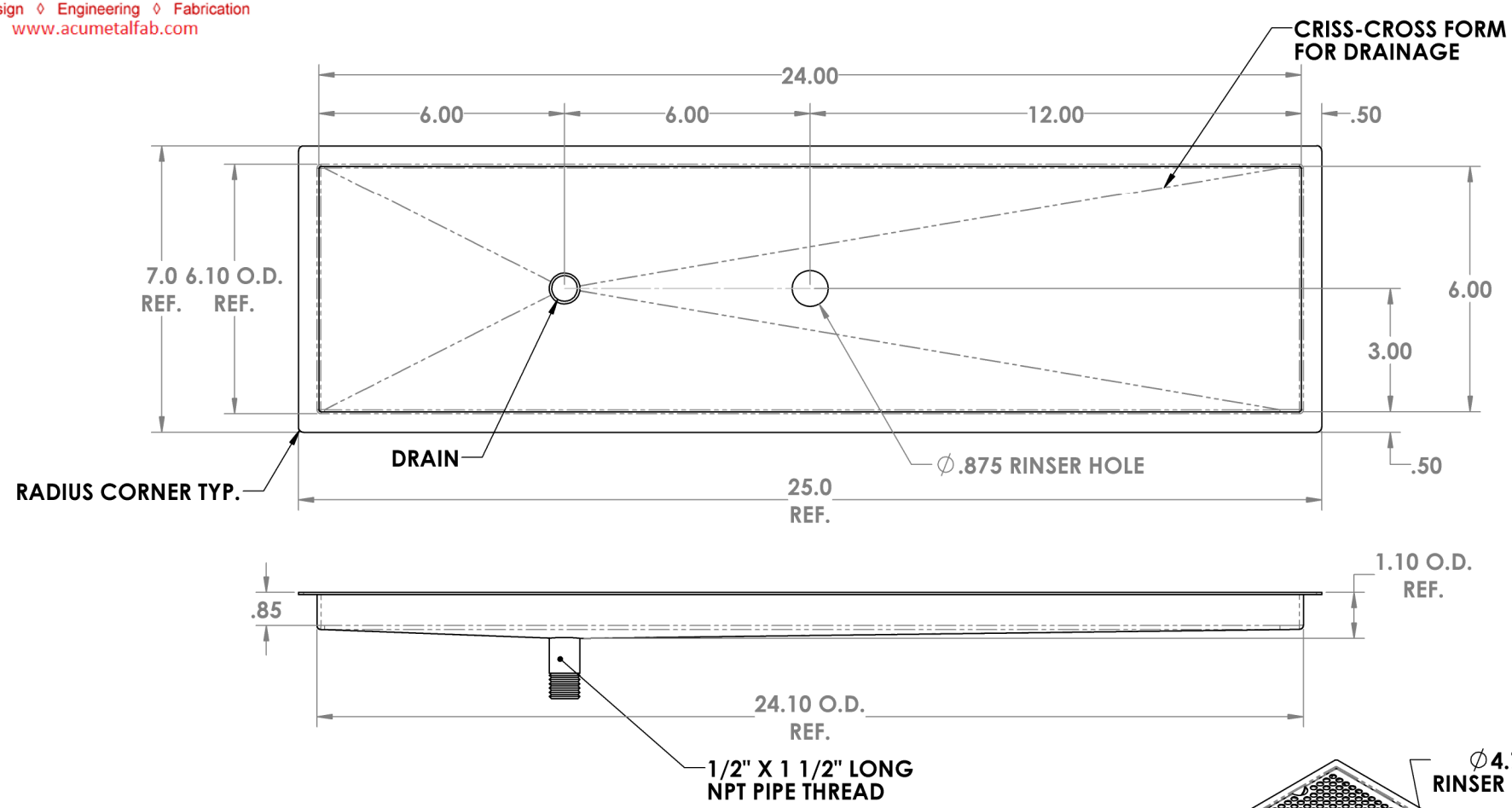

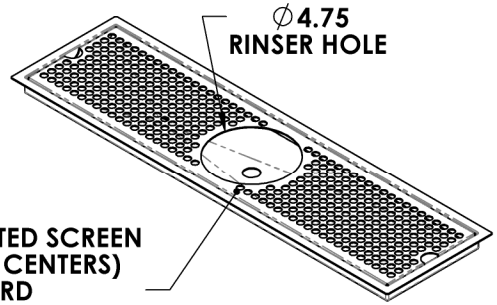

NOTES:

ALL DIMENSIONS ARE INSIDE DIMENSIONS (UNLESS OTHERWISE NOTED)

*RINSER HARDWARE NOT INCLUDED : SOLD SEPARATELY

PART # 0706-24-9

www.acumetalfab.com

PROPRIETARY AND CONFIDENTIAL
THE INFORMATION CONTAINED IN THIS DRAWING IS THE SOLE PROPERTY OF ACU PRECISION SHEET METAL. ANY REPRODUCTION IN PART OR AS A WHOLE WITHOUT THE WRITTEN PERMISSION OF ACU PRECISION SHEET METAL IS PROHIBITED.
ACU PRECISION SHEET METAL IS : AMERICAN COFFEE URN MANUFACTURING CO., INC

	NAME	DATE
DRAWN	L. WILLIAMS	05/17
MATERIAL	16 GA. BRASS	
FINISH	#8 POLISHED	

DO NOT SCALE DRAWING

TITLE: FM-R-OD FLUSH MOUNT W/RINSER HOLE* & OFFSET DRAIN 6" X 24"

AMERICAN COFFEE URN