American Coffee Urn Manufacturing Co., Inc.
Since 1959
Precision Sheet Metal
Design ◊ Engineering ◊ Fabrication
www.acumetalfab.com

CHANGE DIMENSIONS AS NEEDED FOR CUSTOM T-TOWERS

REVISIONS				
ZONE	REV.	DESCRIPTION	DATE	APPROVED

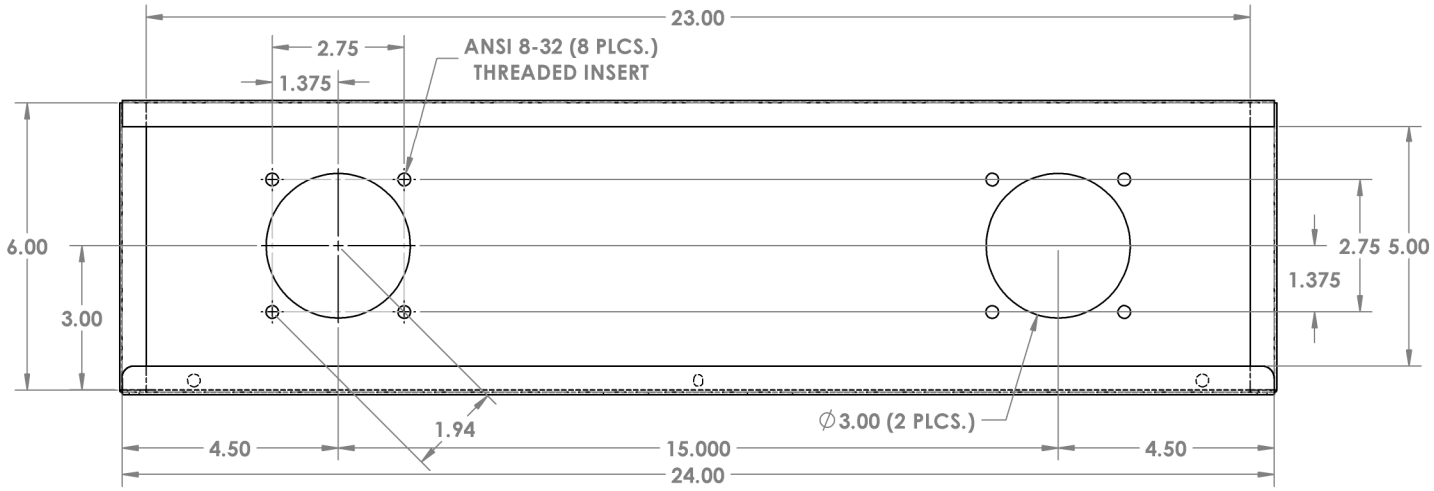

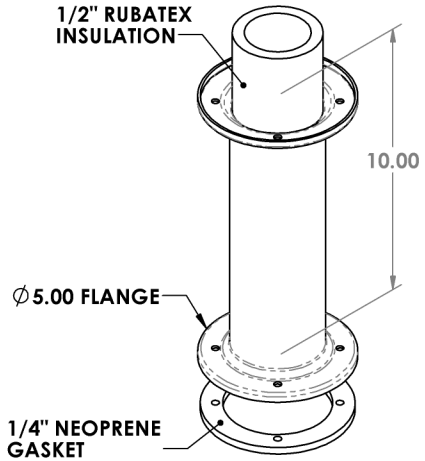

STANDARD 3" PEDESTAL

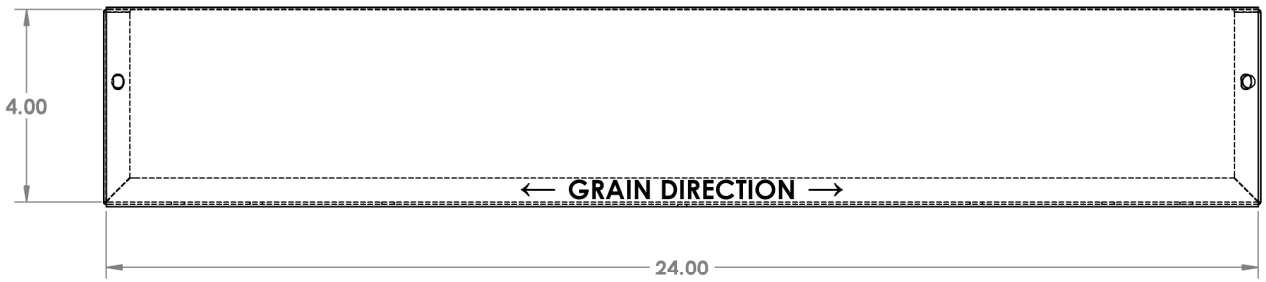

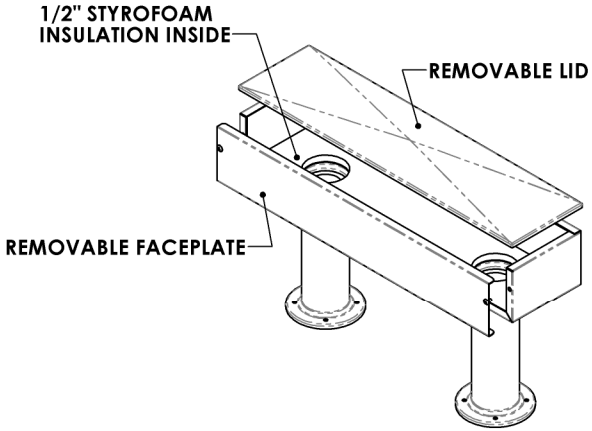

NOTES:

ALL DIMENSIONS ARE INSIDE DIMENSIONS (UNLESS OTHERWISE NOTED)

***FAUCET HARDWARE NOT INCLUDED**

PART # 1001-24-NoHole-SS4

PROPRIETARY AND CONFIDENTIAL
THE INFORMATION CONTAINED IN THIS DRAWING IS THE SOLE PROPERTY OF ACU PRECISION SHEET METAL. ANY REPRODUCTION IN PART OR AS A WHOLE WITHOUT THE WRITTEN PERMISSION OF ACU PRECISION SHEET METAL IS PROHIBITED.
ACU PRECISION SHEET METAL IS : AMERICAN COFFEE URN MANUFACTURING CO., INC

	NAME	DATE
DRAWN	L. WILLIAMS	08/16
MATERIAL	18 GA. 304 STAINLESS STEEL	
FINISH	#4 BRUSHED	

DO NOT SCALE DRAWING

TITLE: 3" T-TOWER
24" T-TOWER BOX*
W/ NO HOLE FACEPLATE
DOUBLE PEDESTAL

AMERICAN COFFEE URN

www.acumetalfab.com