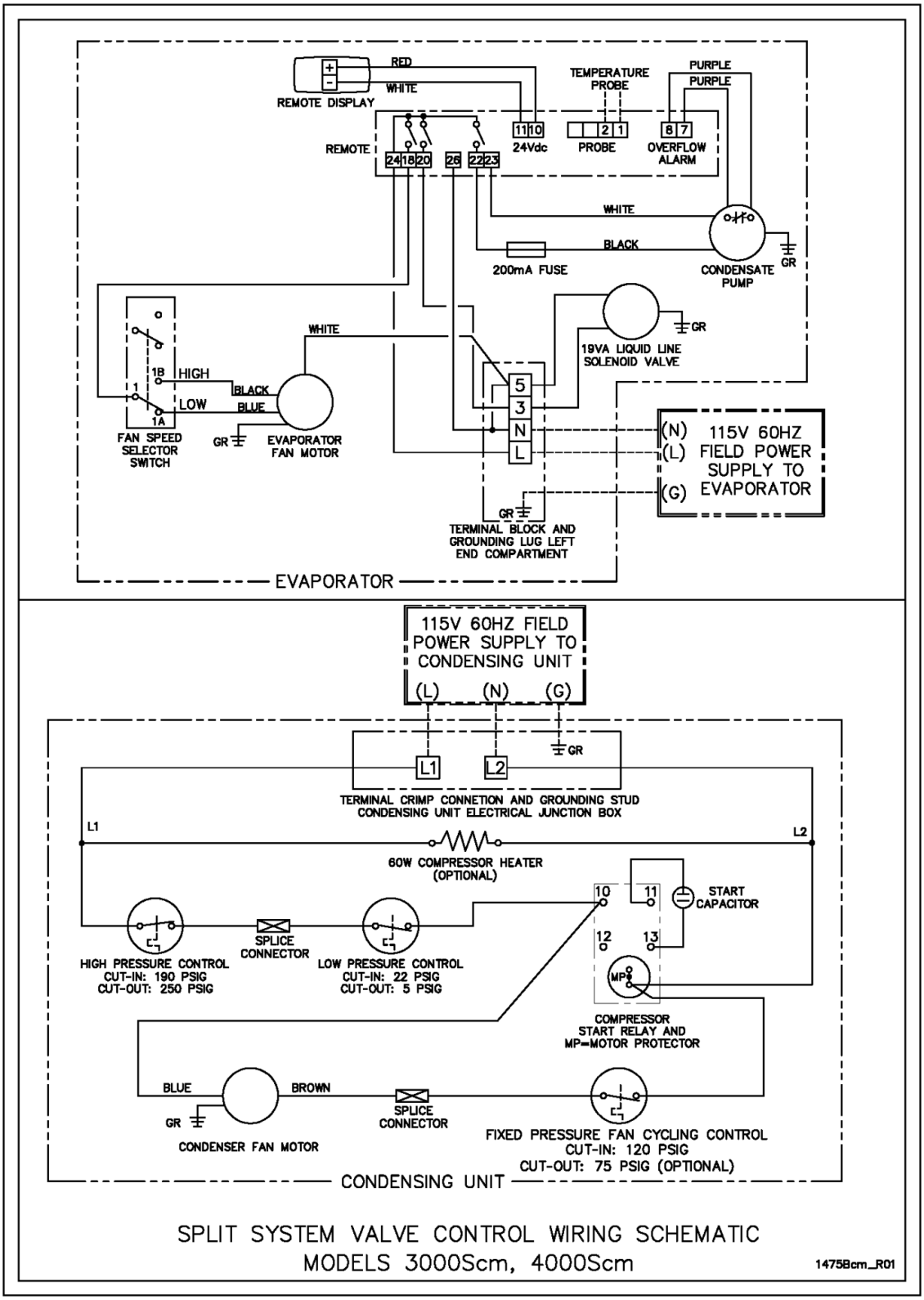
REMOTE DISPLAY
RED
WHITE
TEMPERATURE PROBE
PURPLE
PURPLE
REMOTE
24 18 20
26
22 23
11 10
24Vdc
2 1
PROBE
8 7
OVERFLOW ALARM
WHITE
BLACK
200mA FUSE
CONDENSATE PUMP
GR
WHITE
19VA LIQUID LINE SOLENOID VALVE
GR
1B
HIGH
1
LOW
1A
BLACK
BLUE
FAN SPEED SELECTOR SWITCH
GR
EVAPORATOR FAN MOTOR
5
3
N
L
(N)
(L)
(G)
115V 60HZ FIELD POWER SUPPLY TO EVAPORATOR
GR
TERMINAL BLOCK AND GROUNDING LUG LEFT END COMPARTMENT
EVAPORATOR
115V 60HZ FIELD POWER SUPPLY TO CONDENSING UNIT
(L) (N) (G)
GR
L1
L2
TERMINAL CRIMP CONNETION AND GROUNDING STUD CONDENSING UNIT ELECTRICAL JUNCTION BOX
L1
L2
60W COMPRESSOR HEATER (OPTIONAL)
10
11
START CAPACITOR
12
13
MP
HIGH PRESSURE CONTROL CUT-IN: 190 PSIG CUT-OUT: 250 PSIG
SPLICE CONNECTOR
LOW PRESSURE CONTROL CUT-IN: 22 PSIG CUT-OUT: 5 PSIG
COMPRESSOR START RELAY AND MP=MOTOR PROTECTOR
BLUE
BROWN
GR
CONDENSER FAN MOTOR
SPLICE CONNECTOR
FIXED PRESSURE FAN CYCLING CONTROL CUT-IN: 120 PSIG CUT-OUT: 75 PSIG (OPTIONAL)
CONDENSING UNIT
SPLIT SYSTEM VALVE CONTROL WIRING SCHEMATIC
MODELS 3000Scm, 4000Scm
1475Bcm_R01

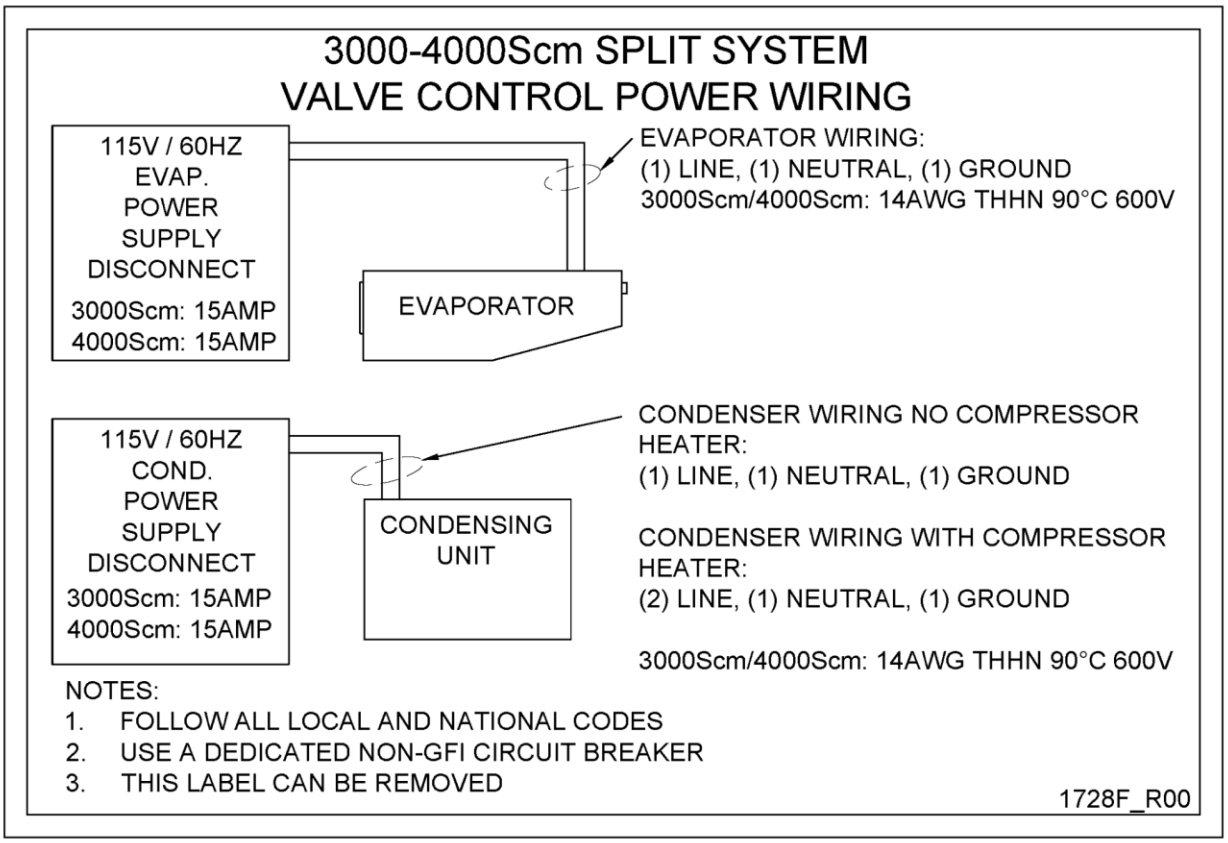
3000-4000Scm SPLIT SYSTEM
VALVE CONTROL POWER WIRING
115V / 60HZ
EVAP.
POWER
SUPPLY
DISCONNECT
3000Scm: 15AMP
4000Scm: 15AMP
EVAPORATOR
EVAPORATOR WIRING:
(1) LINE, (1) NEUTRAL, (1) GROUND
3000Scm/4000Scm: 14AWG THHN 90°C 600V
115V / 60HZ
COND.
POWER
SUPPLY
DISCONNECT
3000Scm: 15AMP
4000Scm: 15AMP
CONDENSING
UNIT
CONDENSER WIRING NO COMPRESSOR
HEATER:
(1) LINE, (1) NEUTRAL, (1) GROUND
CONDENSER WIRING WITH COMPRESSOR
HEATER:
(2) LINE, (1) NEUTRAL, (1) GROUND
3000Scm/4000Scm: 14AWG THHN 90°C 600V
NOTES:
1. FOLLOW ALL LOCAL AND NATIONAL CODES
2. USE A DEDICATED NON-GFI CIRCUIT BREAKER
3. THIS LABEL CAN BE REMOVED
1728F_R00