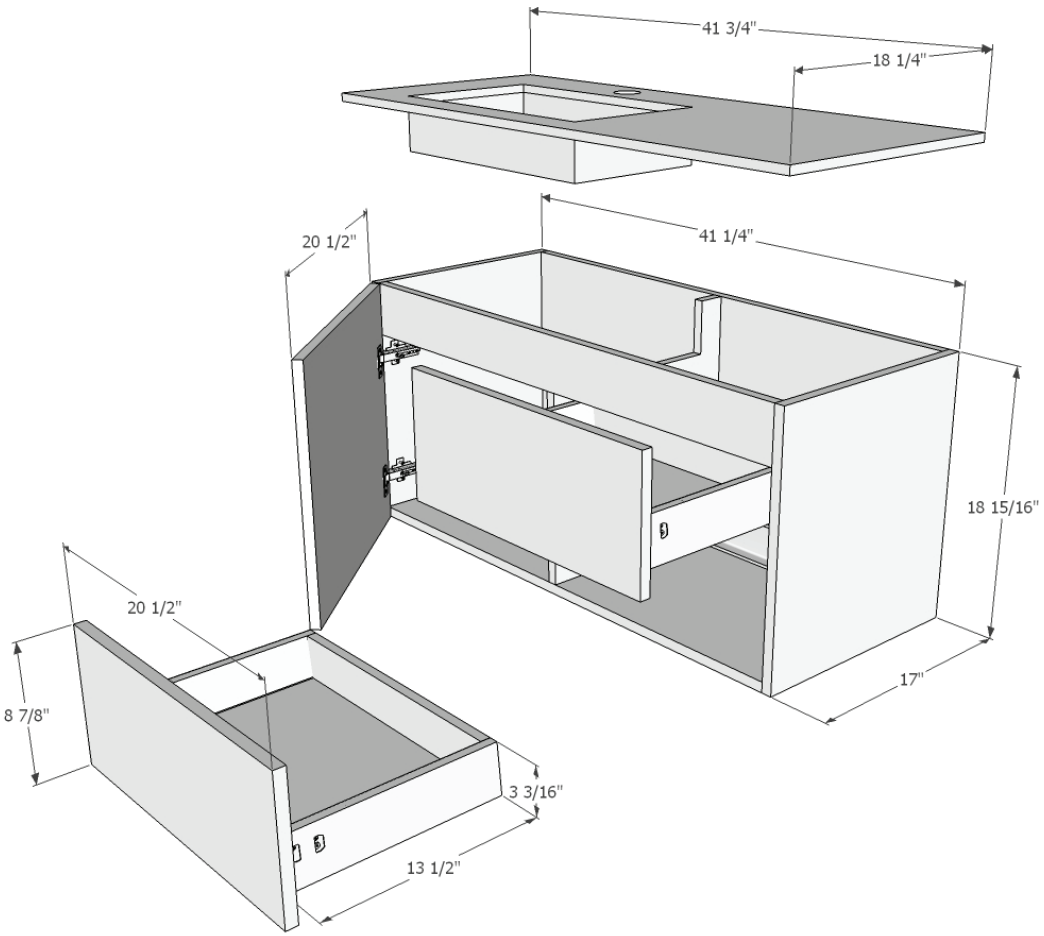

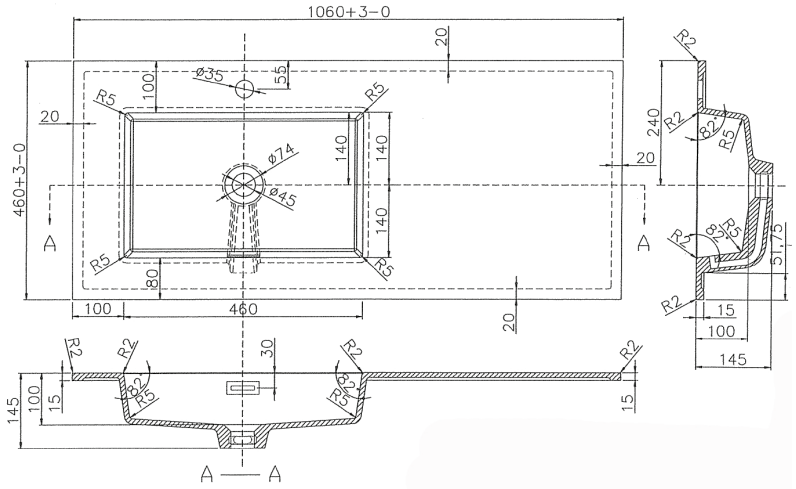

SINK DETAIL

Flow Rate: 10.15sec/gal

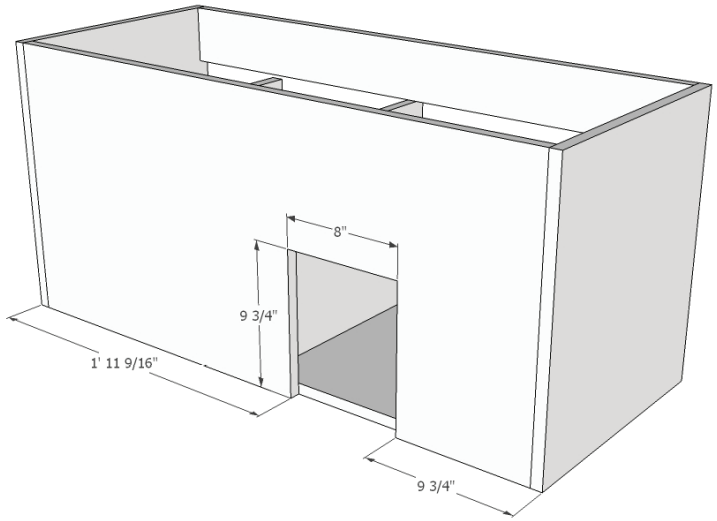

BACK DETAIL

CUTLER KITCHEN & BATH

COLLECTION NAME

BEACHWOOD COLLECTION

CUTLER KITCHEN & BATH
81 ROYAL GROUP CRESCENT UNIT A VAUGHAN ONTARIO CANDA L4H 1X9 (tel) 905.212.121 (fax) 905.238.5512

VANITY STYLE	PRODUCT CODE
WALL HUNG	FV BW%42

DESCRIPTION

42" Beachwood Collection - 1 Door 2 Drawers

DISCLAIMER

ALL INFORMATION CONTAINED IN THIS DOCUMENT IS CONFIDENTIAL AND SHALL NOT BE REPRODUCED OR DIVULGED, IN WHOLE OR IN PART. DIMENSIONS ON FINISHED VANITIES MAY VARY SLIGHTLY FROM THOSE SHOWN ON THESE SPECIFICATIONS DUE TO VARIABILITY IN CONSTRUCTION MATERIALS.

CABINET SIZE

42" WIDE x 18 15/16" HIGH x 17" DEEP

AUTH. BY	DATE	REVISION #	PAGE #
SHANE	2019-07-29	1	1 OF 1