Ergonomic Corporation (Hong Kong) Ltd.

MULTIPLE MONITOR STANDS (PREMIUM SERIES)

Will make your display more modern working environment
Sturdy stand even if the load is also able to move smoothly, comes with wire hook, wire easily placed more beautiful

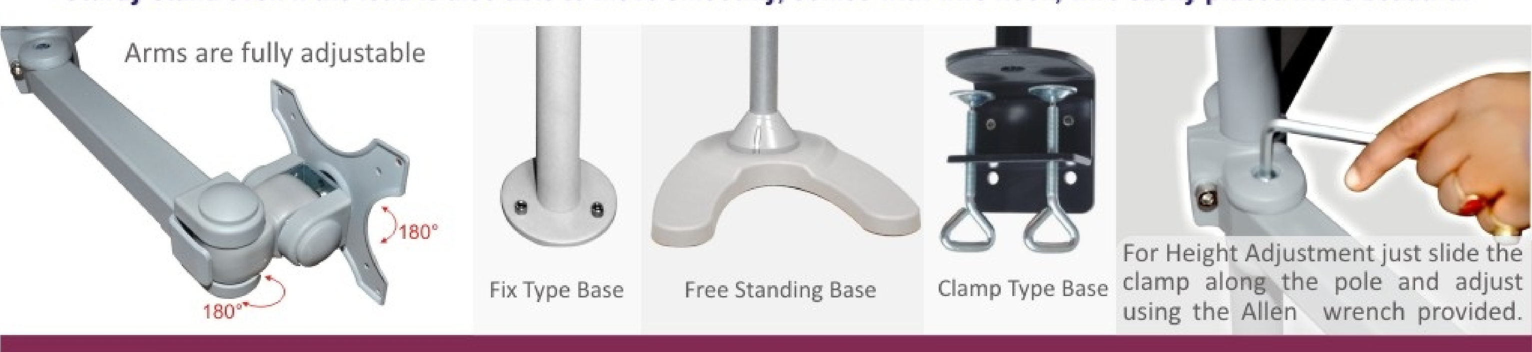

Dual Monitor Stand Vertical (Table fix Version)

2MS - FTV

Designs to support two screens from one pole.

- •Pivots & mounts provides mounting and dismounting.
- •Quick set up and installation.
- •Cable management system.
- •75mm and 100mm VESA compatible
- •Pivots 20° up / 10° down for each monitor.
- •Holds monitors 17" to 23" up to 10kgs.
- •Pole height 30 inch.
- •The space between the monitors are fully adjustable.
- •Monitors can adjust in height, tilt, swivel & can rotate. Stand can be bolted to table.
- •Arms are fully adjustable.
- •The height adjustment of arms is continuous along the pole. Just slide the clamp along the pole and adjust using the Allen wrench provided.
- •Each mount can be tilted left, right, up & down. You can also rotate each monitor from portrait to landscape on the fly.

Dual Monitor Stand Horizontal (Table fix Version)

2MS - FTH

Designs to support two screens from one pole.

- •Pivots & mounts provides mounting and dismounting.
- •Quick set up and installation.
- •Cable management system.
- •75mm and 100mm VESA compatible
- •Pivots 20° up / 10° down for each monitor.
- •Holds monitors 17" to 23" up to 25 lbs.
- •Pole height 18 inch.
- •The space between the monitors are fully adjustable.
- •Monitors can adjust in height, tilt, swivel & can rotate. Stand can be bolted to table.
- •Arms are fully adjustable.
- •The height adjustment of arms is continuous along the pole. Just slide the clamp along the pole and adjust using the Allen wrench provided.
- •Each mount can be tilted left, right, up & down. You can also rotate each monitor from portrait to landscape on the fly.

Dual Monitor Stand Vertical (Free Standing U Base)

2MS - FV

Designs to support two screens from one pole.

- •Pivots & mounts provides mounting and dismounting.
- •Quick set up and installation.
- •Cable management system.
- •75mm and 100mm VESA compatible
- •Pivots 20° up / 10° down for each monitor.
- •Holds monitors 17" to 23" up to 25 lbs.
- •Pole height 30 inch.
- •The space between the monitors are fully adjustable.
- •Monitors can adjust in height, tilt, swivel & can rotate.
- •Arms are fully adjustable.
- •The height adjustment of arms is continuous along the pole. Just slide the clamp along the pole and adjust using the Allen wrench provided.
- •Each mount can be tilted left, right, up & down. You can also rotate each monitor from portrait to landscape on the fly.

Dual Monitor Stand Horizontal (Free Standing U Base)

2MS - FH

Designs to support two screens from one pole.

- •Pivots & mounts provides mounting and dismounting.
- •Quick set up and installation.
- •Cable management system.
- •75mm and 100mm VESA compatible
- •Pivots 20° up / 10° down for each monitor.
- •Holds monitors 17" to 23" up to 25 lbs.
- •Pole height 18 inch.
- •The space between the monitors are fully adjustable.
- •Monitors can adjust in height, tilt, swivel & can rotate.
- •Arms are fully adjustable.
- •The height adjustment of arms is continuous along the pole. Just slide the clamp along the pole and adjust using the Allen wrench provided.
- •Each mount can be tilted left, right, up & down. You can also rotate each monitor from portrait to landscape on the fly.

Premium Dual Monitor Stand (With wider arms & Free Standing U base)

2MS - FHW

Designs to support two screens from one pole.

Stable desk stand designed for two monitors from 13" to 27" each (10 kgs) Multiple monitors on single base frees up valuable desk workspace Supports tilt angles of +/-15o (up & down), +/-15o swivel (left & right) and 360o rotation (portrait & landscape) for easy adjustment of viewing angle. Adjust monitor support arm height from 9" to 18.5" (228mm to 470mm) & fine-tune individual monitor height +/- 0.15" (+/- 4mm) for proper alignment
Supports portrait or landscape monitor orientations

Installation options:
Solid table-top base for use on any solid/flat surface
Through-hole/grommet mounting is compatible with surface holes 3/8" to 2.5" (10mm to 63mm) wide and up to 2.5" (63mm) thick. Integrated cable management keeps cables neat, organized & out of the way
Compatible with VESA mounting 50x50mm, 75x75mm and 100x100mm patterns.

Premium Dual Monitor Stand (With wider arms & Fix type base)

2MS - FP

Designs to support two screens from one pole.

we provide a Multiple monitor stand (Premium Quality with long adjustable arm) with 2 monitor or dual display ability with freestanding and horizontal display solution. This LCD Monitor stand is an ergonomic Workstation that help to maximize the desk space and reduce the back pain and neck pain. Long arm will help you to pull the monitor more near. The Dual Monitor Stand is a family of elegant aluminum LCD VESA desk mounts for 13"-27" monitors. It can support two monitors in horizontal line and the weight capability for each one is 8 kgs /17.6 lbs. It can rotate for 360°, which allows portrait and landscape viewing.
Pivots & mounts provides mounting and dismounting.
Quick set up and installation.
Cable management system.
75mm and 100mm VESA compatible
Pivots 20° up / 10° down for each monitor.
Holds monitors 19" to 27".
Pole height 18 inch.
The space between the monitors are fully adjustable.
Monitors can adjust in height, tilt, swivel & can rotate.
Arms are fully adjustable.
The height adjustment of arms is continuous along the pole. Just slide the clamp along the pole and adjust using the Allen wrench provided.
Each mount can be tilted left, right, up & down. You can also rotate each monitor from portrait to landscape on the fly.

Premium Dual Monitor Stand (With wider arms & Fix type base)

2MS - FTHP

Designs to support two screens from one pole.

- •Pivots & mounts provides mounting and dismounting.
- •Quick set up and installation.
- •Cable management system.
- •75mm and 100mm VESA compatible
- •Pivots 20° up / 10° down for each monitor.
- •Holds monitors 19" to 27".
- •Pole height 18 inch.
- •The space between the monitors are fully adjustable.
- •Monitors can adjust in height, tilt, swivel & can rotate. Stand can be bolted to table.
- •Arms are fully adjustable.
- •The height adjustment of arms is continuous along the pole. Just slide the clamp along the pole and adjust using the Allen wrench provided.
- •Each mount can be tilted left, right, up & down. You can also rotate each monitor from portrait to landscape on the fly.

Dual Monitor Stand Horizontal (Clamp type)

2MS - CT

Designs to support two screens from one pole.

1. Ultra heavy duty "C" clamp Integrated double lock
2. Copper material in main joint
3. Aluminum and steel construction

Material: Metal
Max VESA: 100 x 100
Monitor Size: 13"-27"
Capacity: 10 kg / 22 lbs
Monitor Qty: 2
Monitor Shape: Portrait & Landscape
Tilting: -15 ~ +15 degree
Swiving: 360 degree
Rotate: 360 degree
Tube: Size35mm
Arms: Dual Aluminum Arms
Tube: Height450 mm
Clamp Type: Double Lock
Wire Management: Included
Hardware: Included
Material: Steel & Aluminum
Unit Weight: 4.5 kg
Finish: Powder Coating
Color: Black

Dual Monitor Stand Horizontal (Clamp type)

2MS - Ct2

Designs to support two screens from one pole.

The 2MS-CT2 is a family of elegant aluminum LCD VESA desk mounts for 13"-27" monitors. It can support two monitors in horizontal line and the weight capability for each one is 8kgs/17.6lbs. It can rotate for 360°, which allows portrait and landscape viewing. Its ball-joint structure allows smooth, effortless tilt motion for any direction, making it easy to reduce glare and find the perfect viewing angle. You can also adjust the monitor vertically to a desired position. Besides, it has a nice appearance. Cable clip is included for organizing cables.
Material : Aluminum & steel & plastic
Color : Black & silver
Product Size : 800X115X540mm
Product Weight : 3.5kg
Screen Size : 13"-27"
Weight Capacity : 8kg/17.6lbs
VESA Standard : 75x75,100x100
Tilt : -15°~+15°
Swivel : -15°~+15°
Rotate : 360°
Arm Extend : 772mm
Height : 365mm
Clamp Thickness : 10mm-90mm
Freely Positioning : Yes
Cable Management : Yes

Dual Monitor Stand Horizontal (Clamp type)

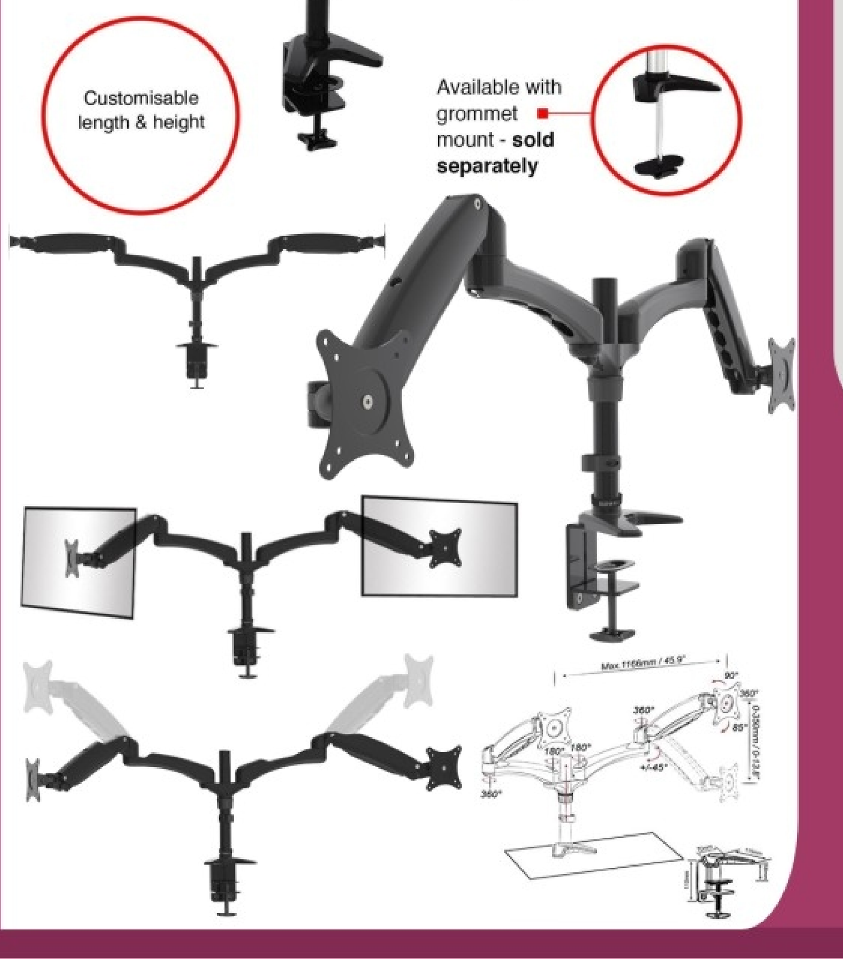

2MS - CtS

Designs to support two screens from one pole.

The Spring desktop mount for 2 monitor or a TV.
The Spring desktop mount has fully adjustable Spring double arms with extentions which gives great flexibility in positioning your monitor. Please see movement image for full clarification
This stand is suitable for types of TV's and monitors of size 15" to 27" (Please see size data image to establish if this stand will fit your Monitor. Please measure the width of your monitor against width our data) which have VESA 100 or VESA 75 mounting holes (the horizontal and vertical distances of the holes at the back of the TV must be 10 or 7.5cm)
This stand will allow you to move the arms up or down and swivel right and left 360°, you can also turn the montior around. Changing positions are very easy to do and do not required any further tools
Extra strong clamp installed on the unit to provide excellent and secure stability. The stand will allow you to put on a monitor of weigh between 2.8kg-7.8kg. Standard monitor accessories included.

Triple Monitor Stand Vertical (Table fix Version)

3MS - FTV

Designs to support three screens from one pole.

- Pivots & mounts provides mounting and dismounting.
- Quick set up and installation.
- Cable management system.
- 75mm and 100mm VESA compatible
- Pivots 20° up / 10° down for each monitor.
- Holds monitors 17" to 23" up to 25 lbs.
- Pole height 30 inch.
- The space between the monitors are fully adjustable.
- Monitors can adjust in height, tilt, swivel & can rotate. Stand can be bolted to table.
- Arms are fully adjustable.
- The height adjustment of arms is continuous along the pole. Just slide the clamp along the pole and adjust using the Allen wrench provided.
- Each mount can be tilted left, right, up & down. You can also rotate each monitor from portrait to landscape on the fly.

Triple Monitor Stand (Table fix Version)

3MS - FT

Designs to support three screens from one pole.

- Pivots & mounts provides mounting and dismounting.
- Quick set up and installation.
- Cable management system.
- 75mm and 100mm VESA compatible
- Pivots 20° up / 10° down for each monitor.
- Holds monitors 17" to 23" up to 25 lbs.
- Pole height 30 inch.
- The space between the monitors are fully adjustable.
- Monitors can adjust in height, tilt, swivel & can rotate. Stand can be bolted to table.
- Arms are fully adjustable.
- The height adjustment of arms is continuous along the pole. Just slide the clamp along the pole and adjust using the Allen wrench provided.
- Each mount can be tilted left, right, up & down. You can also rotate each monitor from portrait to landscape on the fly.

Triple Monitor Stand Horizontal (Free Standing U Base)

3MS - F

Designs to support three screens from one pole.

- Pivots & mounts provides mounting and dismounting.
- Quick set up and installation.
- Cable management system.
- 75mm and 100mm VESA compatible
- Pivots 20° up / 10° down for each monitor.
- Holds monitors 17" to 23" up to 25 lbs.
- Pole height 18 inch.
- The space between the monitors are fully adjustable.
- Monitors can adjust in height, tilt, swivel & can rotate.
- Arms are fully adjustable.
- The height adjustment of arms is continuous along the pole. Just slide the clamp along the pole and adjust using the Allen wrench provided.
- Each mount can be tilted left, right, up & down. You can also rotate each monitor from portrait to landscape on the fly.

Triple Monitor Stand Horizontal (Free Standing U Base)

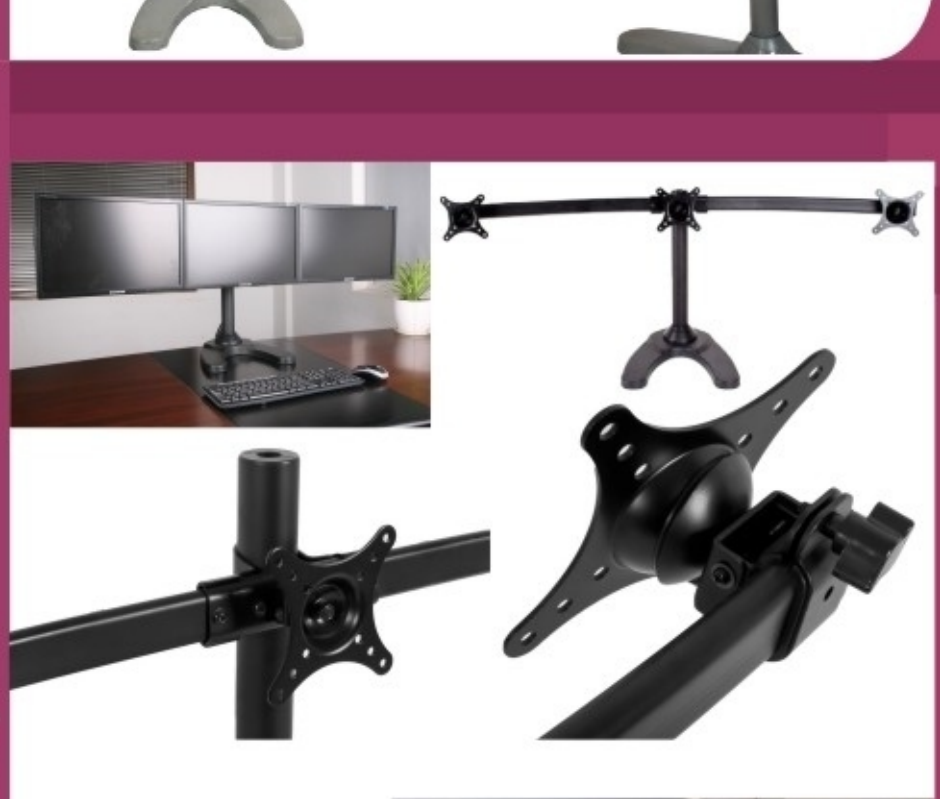

3MS - FH

Designs to support three screens from one pole.

Stable desk stand designed for up to three monitors from 13" to 24" and up to 22 lbs each (10 kgs).
Multiple monitors on single base frees up valuable desk workspace.
Supports tilt angles of +/-15o (up & down), +/-15o swivel (left and right) and 360o rotation (portrait and landscape) for easy adjustment of viewing angle.
Adjust height from 9" to 18.5" (228mm to 470mm) and fine-tune height of each monitor +/- 0.15" (+/- 4mm) for proper alignment
Supports portrait or landscape monitor orientations

Installation options:
Solid table-top base for use on any solid/flat surface
Through-hole/grommet mounting is compatible with surface holes 3/8" to 2.5" (10mm to 63mm) wide and up to 2.5" (63mm) thick. Integrated cable management keeps cables neat, organized and out of the way.
Compatible with VESA mounting 50x50mm, 75x75mm and 100x100mm patterns.

Triple Monitor Stand (C-Clamp type)

3MS - CT

Designs to support three screens from one pole.

- Pivots & mounts provides mounting and dismounting.
- Cable management clips and trim caps.
- 75mm and 100mm VESA compatible.
- Tilt: -15° to +15°, 360° rotate (landscape to portrait).
- Holds monitors 17" to 22" up to 8kg each; 24kg total.
- Pole height 18 inch.
- Monitors can slide to left or right.
- Monitors can adjust in height, tilt, swivel & can rotate.
- C-Clamp mounting.
- Arms are height adjustable.
- The height adjustment of arm is continuous along the pole. Just slide the clamp along the pole and adjust using the Allen wrench provided.

Triple Monitor Stand (Freestanding with Wider Arms)

3MS - FHW

Designs to support three screens from one pole.

- 3 Monitors can be displayed side by side horizontally.
- Die cast aluminum structures
- Integrated cable management
- Easy assembly and disassembly
- Free standing with heavy metal base , requires no clamping or bolting to table
- Foldable arms enable rotation of corner monitor inwards to form a concave shape with 3 monitors for viewing comfort
- Holds monitors 15" to 27"
- Maximum load: 13.8kg
- Tilt: -90 to 45°
- Swivel: 180°
- Rotation: 360°
- VESA: 75/100

Quadraple Monitor Stand
(Clamp Type)

4MS - CT

Designs to support four screens from one pole.

- Monitors can be displayed side by side or back to back.
- Die cast aluminum structures
- Integrated cable management
- Easy assembly and disassembly
- Grommet and desk clamp available
- Holds monitors 15" to 27"
- Maximum load: 13.8kg
- Tilt: -90 to 45°
- Swivel: 180°
- Rotation: 360°
- VESA: 75/100

Quadraple Monitor Stand
(With wider arms & Table fix Version)

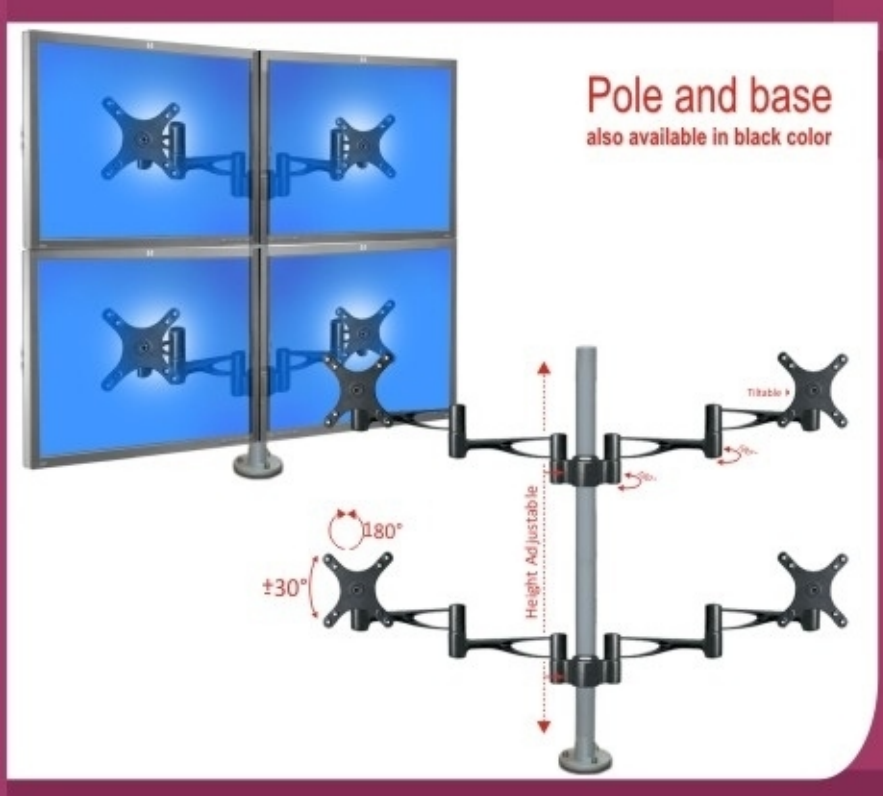

4MS - FTP

Designs to support four screens from one pole.

- Pivots & mounts provides mounting and dismounting.
- Quick set up and installation.
- Cable management system.
- 75mm and 100mm VESA compatible
- Tilt: -30° to +30°.
- Holds monitors 17" to 26" up to 25 lbs.
- Pole height 30 inch.
- The space between the monitors are fully adjustable.
- Monitors can adjust in height, tilt, swivel & can rotate. Stand can be bolted to table.
- Arms are fully adjustable.
- The height adjustment of arms is continuous along the pole. Just slide the clamp along the pole.
- Each mount can be tilted left, right, up & down. You can also rotate each monitor from portrait to landscape on the fly.

Quadruple Monitor Stand
(With wider arms & Free Standing U base)

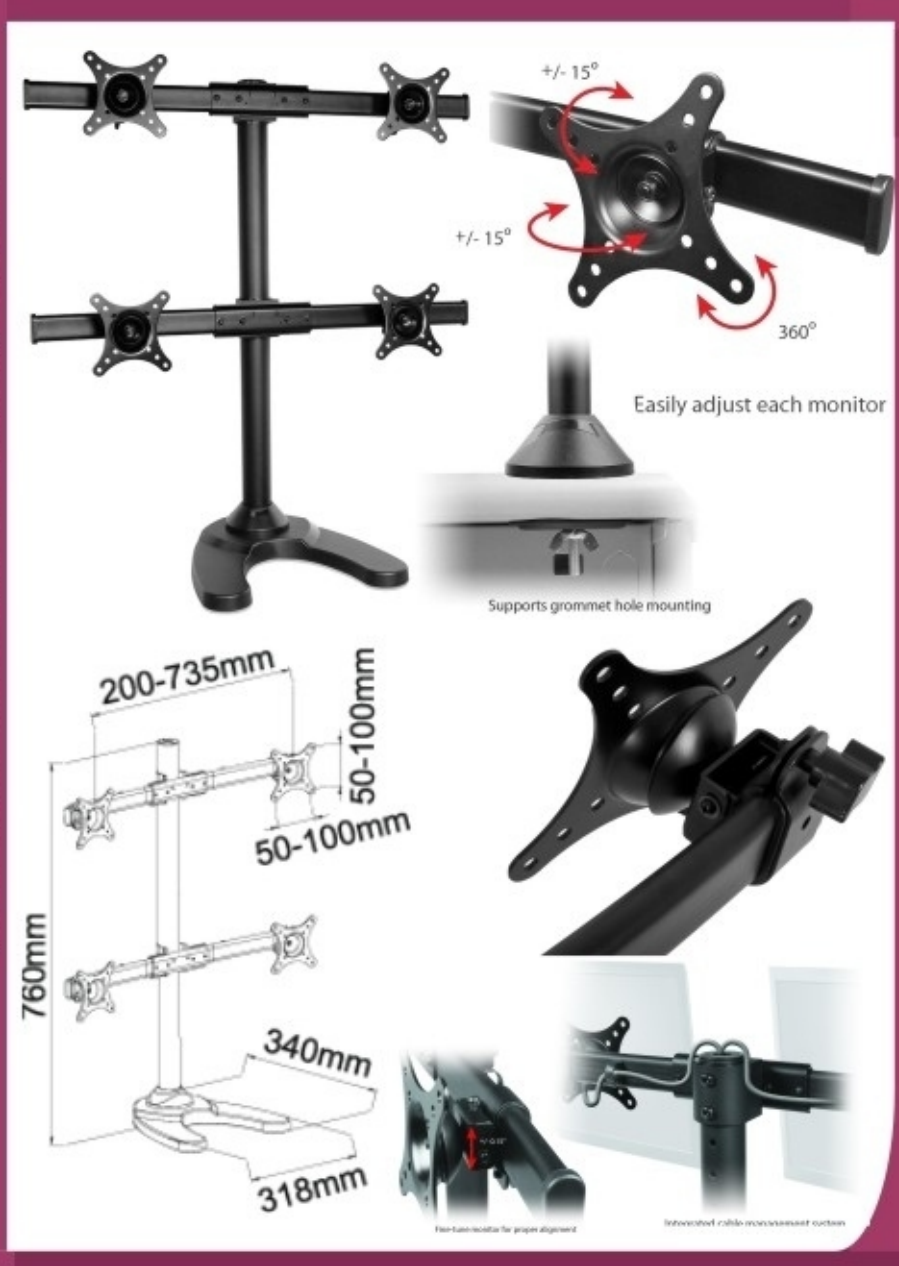

4MS - FP

Designs to support four screens from one pole.

Stable desk stand designed for up to four monitors from 13" to 27" (10 kgs) each
Multiple monitors on single base frees up valuable desk workspace and increases productivity
Supports tilt angles of +/-15o (up and down), +/-15o swivel (left and right) and 360o rotation (portrait and landscape) for easy adjustment of viewing angle.
Adjust monitor support arms up to 29.4" (748mm) and fine-tune individual monitor heights +/- 0.15" (+/- 4mm) for proper alignment
Supports portrait or landscape monitor orientations
Installation options:
Solid table-top base for use on any solid/flat surface
Through-hole/grommet mounting is compatible with surface holes 3/8" to 2.5" (10mm to 63mm) wide and up to 2.5" (63mm) thick
Integrated cable management keeps cables neat, organized and out of the way
Compatible with VESA mounting 50x50mm, 75x75mm and 100x100mm patterns

Quadraple Monitor Stand
(Table fix Version)

4MS - FT

Designs to support four screens from one pole.

- Pivots & mounts provides mounting and dismounting.
- Quick set up and installation.
- Cable management system.
- 75mm and 100mm VESA compatible
- Pivots 20° up / 10° down for each monitor.
- Holds monitors 17" to 23" up to 25 lbs.
- Pole height 30 inch.
- The space between the monitors are fully adjustable.
- Monitors can adjust in height, tilt, swivel & can rotate. Stand can be bolted to table.
- Arms are fully adjustable.
- The height adjustment of arms is continuous along the pole. Just slide the clamp along the pole and adjust using the Allen wrench provided.
- Each mount can be tilted left, right, up & down. You can also rotate each monitor from portrait to landscape on the fly.

Quadraple Monitor Stand
(Free Standing U Base)

4MS - F

Designs to support four screens from one pole.

- Pivots & mounts provides mounting and dismounting.
- Quick set up and installation.
- Cable management system.
- 75mm and 100mm VESA compatible
- Pivots 20° up / 10° down for each monitor.
- Holds monitors 17" to 23" up to 25 lbs.
- Pole height 30 inch.
- The space between the monitors are fully adjustable.
- Monitors can adjust in height, tilt, swivel & can rotate.
- Arms are fully adjustable.
- The height adjustment of arms is continuous along the pole. Just slide the clamp along the pole and adjust using the Allen wrench provided.
- Each mount can be tilted left, right, up & down. You can also rotate each monitor from portrait to landscape on the fly.

Quadraple Monitor Stand Horizontal
(Free Standing U Base)

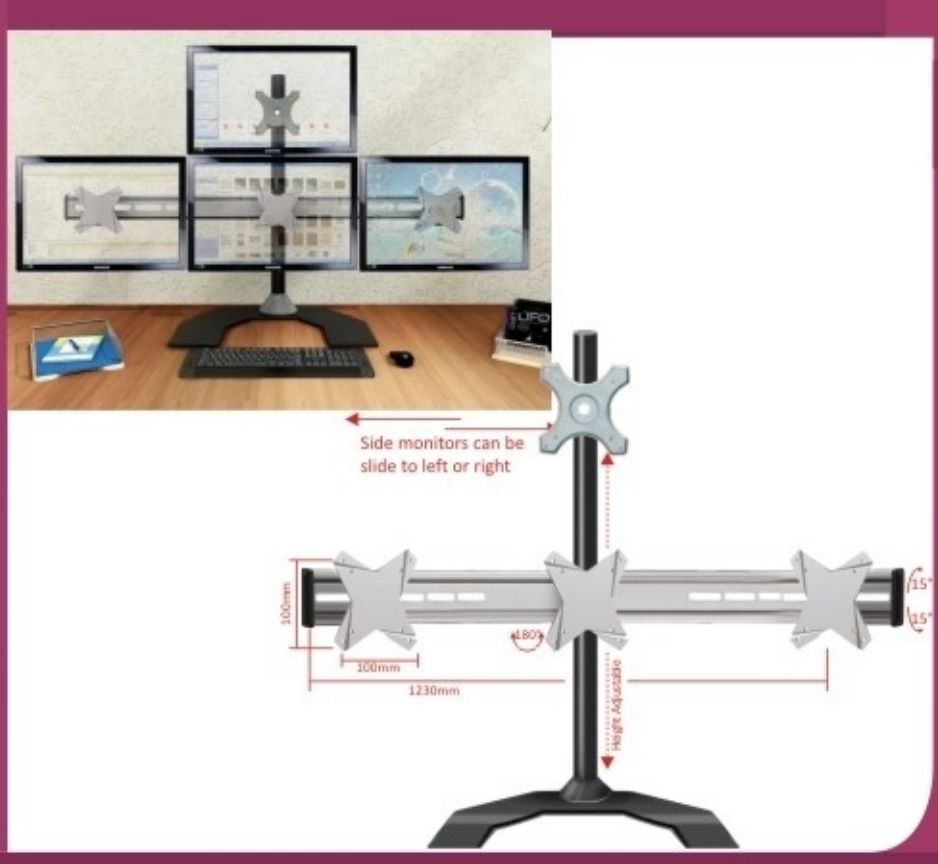

4MS - FH

Designs to support four screens from one pole.

- Pivots & mounts provides mounting and dismounting
- Quick set up and installation.
- 75mm and 100mm VESA compatible
- Pivots 15° up / 15° down for each monitor.
- Holds monitors 17" to 22".
- Pole height 30 inch.
- The space between the monitors are fully adjustable.
- Monitors can adjust in height, tilt, swivel & rotate.
- Arm is height adjustable.
- The height adjustment of arms is continuous along the pole. Just slide the clamp along the pole and adjust using the Allen wrench provided.
- Each mount can be tilted left, right, up & down. You can also rotate each monitor from portrait to landscape on the fly.

Five Monitor Stand
(Free Standing U Base)

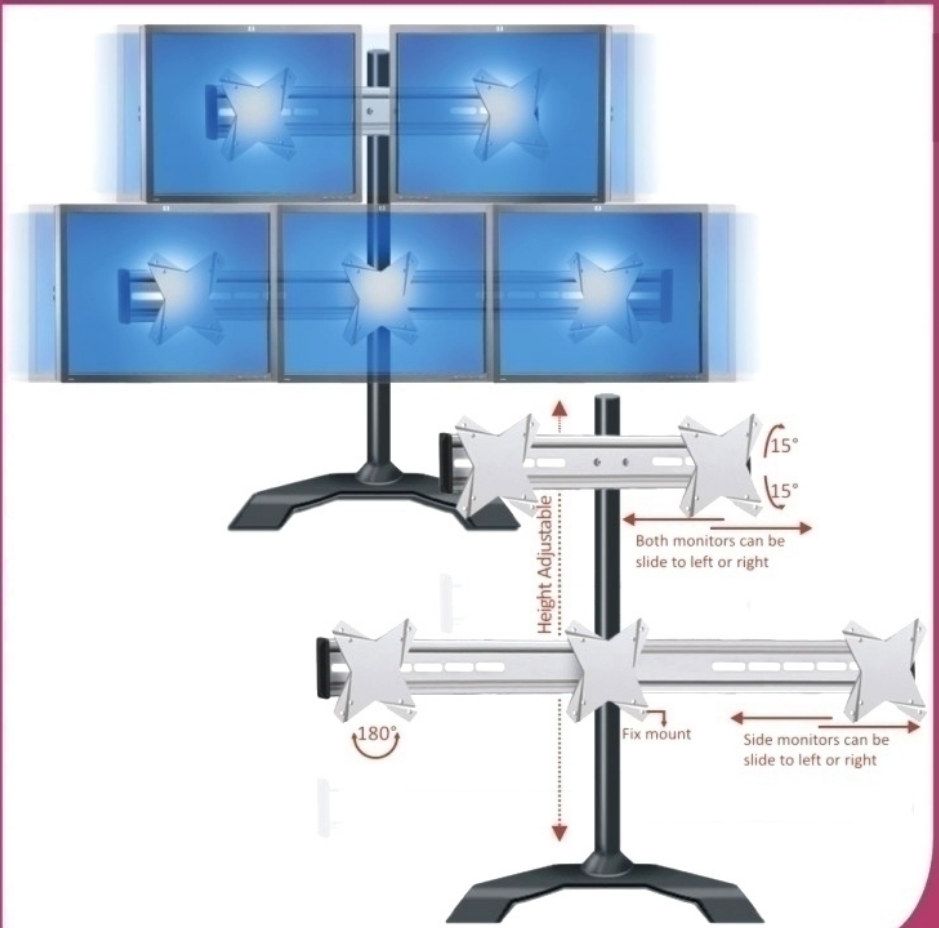

5MS - FH

Designs to support five screens from one pole.

- Pivots & mounts provides mounting and dismounting.
- Quick set up and installation.
- 75mm and 100mm VESA compatible
- Pivots 15° up / 15° down for each monitor.
- Holds monitors 17" to 22".
- Pole height 30 inch.
- The space between the monitors are fully adjustable.
- Monitors can adjust in height, tilt, swivel & rotate.
- Arm is height adjustable.
- The height adjustment of arms is continuous along the pole. Just slide the clamp along the pole and adjust using the Allen wrench provided.
- Each mount can be tilted left, right, up & down. You can also rotate each monitor from portrait to landscape on the fly.

Premium Six Monitor Stand
(Free Standing U Base)

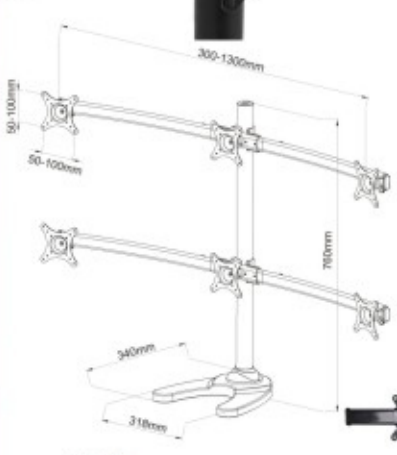

6MS - FHP

Designs to support six screens from one pole.

Stable desk stand designed for up to six monitors from 13" to 24" and up to 22 lbs (10 kgs) each
Multiple monitors on single base frees up valuable desk workspace and increases productivity
Supports tilt angles of +/-15o (up and down), +/-15o swivel (left and right) and 360o rotation (portrait and landscape) for easy adjustment of viewing angle. Adjust monitor support arms up to 29.4" (748mm) and fine-tune individual monitor heights +/- 0.15" (+/- 4mm) for proper alignment
Supports portrait or landscape monitor orientations.

Installation options:
Solid table-top base for use on any solid/flat surface
Through-hole/grommet mounting is compatible with surface holes 3/8" to 2.5" (10mm to 63mm) wide and up to 2.5" (63mm) thick
Integrated cable management keeps cables neat, organized and out of the way
Compatible with VESA mounting 50x50mm, 75x75mm and 100x100mm patterns

Six Monitor Stand Horizontal
(Free Standing U Base)

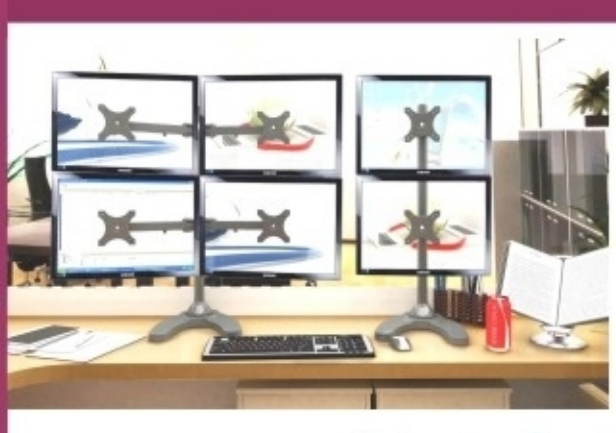

6MS - FH

Designs to support six screens from one pole.

- Pivots & mounts provides mounting and dismounting
- Quick set up and installation.
- 75mm and 100mm VESA compatible.
- Holds monitors 19" to 23".
- Pole height 30 inch.
- The space between the monitors are fully adjustable.
- Monitors can adjust in height, tilt, swivel & rotate.
- Arm is height adjustable.
- The height adjustment of arms is continuous along the pole. Just slide the mount along the pole and adjust using the Allen wrench provided.
- Each mount can be tilted left, right, up & down. You can also rotate each monitor from portrait to landscape on the fly.

Six Monitor Stand Vertical
(Free Standing U base)

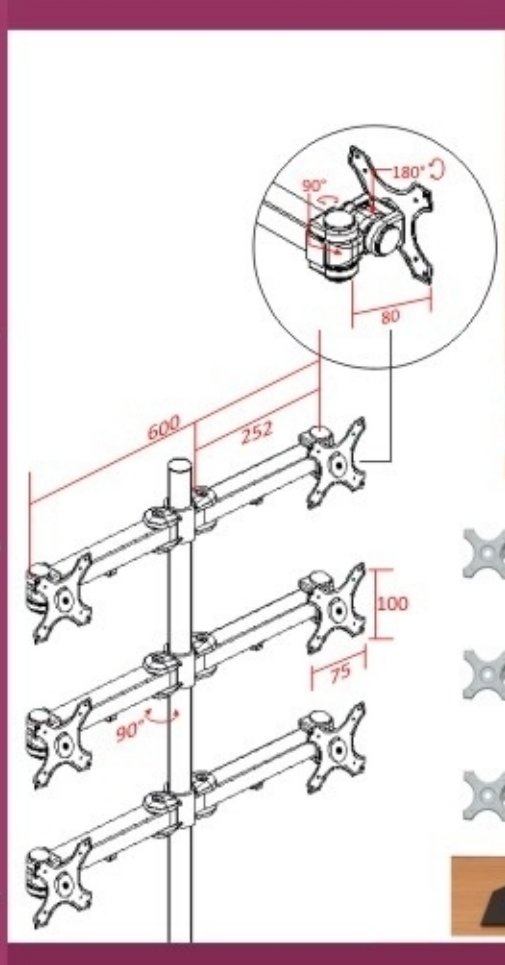

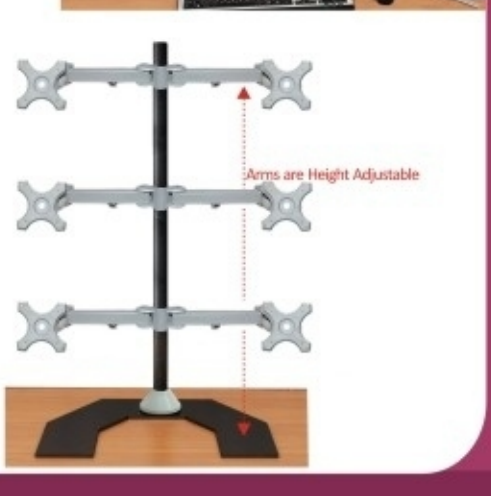

6MS - FV

Designs to support six screens from one pole.

- Pivots & mounts provides mounting and dismounting.
- Quick set up and installation.
- 75mm and 100mm VESA compatible
- Pivots 15° up / 15° down for each monitor.
- Holds monitors 19" to 23".
- Pole height 30 inch.
- The space between the monitors are fully adjustable.
- Monitors can adjust in height, tilt, swivel & rotate.
- Arms are height adjustable.
- The height adjustment of arms is continuous along the pole. Just slide the clamp along the pole and adjust using the Allen wrench provided.
- Each mount can be tilted left, right, up & down. You can also rotate each monitor from portrait to landscape on the fly.

Six Monitor Stand Horizontal
(C-Clamp type)

- Monitors can be slide
- -15°-+15° up and down tilt
- 360° landscape to portrait rotate

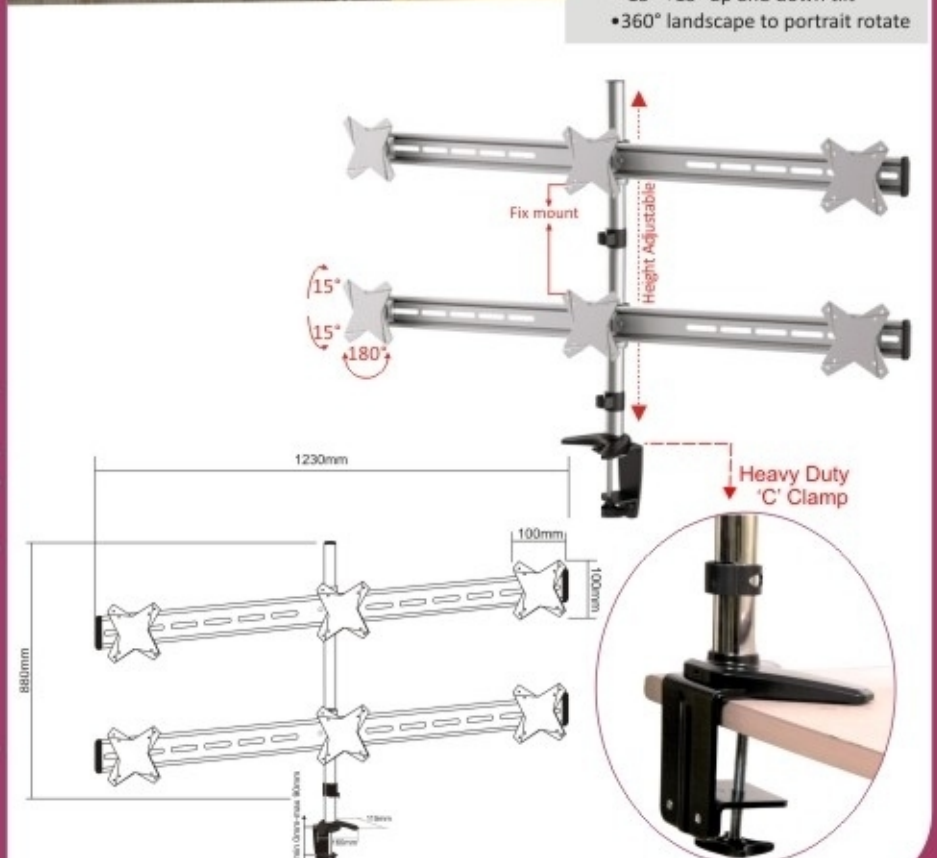

6MS - CT

Designs to support six screens from one pole.

- Pivots & mounts provides mounting and dismounting.
- Quick set up and installation.
- 75mm and 100mm VESA compatible
- Pivots 15° up / 15° down for each monitor.
- Holds monitors 17" to 23".
- Pole height 30 inch.
- The space between the monitors are fully adjustable.
- Monitors can adjust in height, tilt, swivel & rotate.
- Arm is height adjustable.
- The height adjustment of arms is continuous along the pole. Just slide the clamp along the pole and adjust using the Allen wrench provided.
- Each mount can be tilted left, right, up & down. You can also rotate each monitor from portrait to landscape on the fly.

Six Monitor Stand Horizontal
(C-Clamp type)

6MS - CT-2

Designs to support six screens from one pole.

- Pivots & mounts provides mounting and dismounting.
- Quick set up and installation.
- 75mm and 100mm VESA compatible
- Pivots 15° up / 15° down for each monitor.
- Holds monitors 17" to 23".
- The space between the monitors are fully adjustable.
- Monitors can adjust in height, tilt, swivel & rotate.
- Arm is height adjustable.
- The height adjustment of arms is continuous along the pole. Just slide the clamp along the pole and adjust using the Allen wrench provided.
- Each mount can be tilted left, right, up & down. You can also rotate each monitor from portrait to landscape on the fly.

Six Monitor Stand Horizontal
(with white arm)

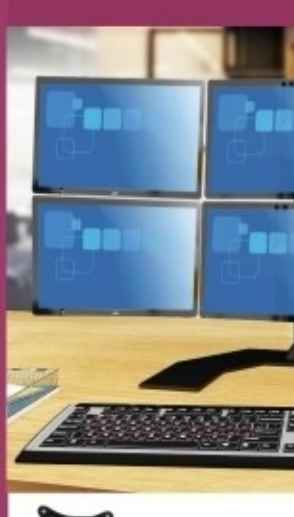

6MS - FHW

Designs to support six screens from one pole.

- 6 Monitors can be displayed side by side horizontally.
- Die cast aluminum structures
- Integrated cable management
- Easy assembly and disassembly
- Free standing with heavy metal base , requires no clamping or bolting to table
- Foldable arms enable rotation of corner monitor inwards to form a concave shape with 3 monitors for viewing comfort
- Holds monitors 15" to 24"
- Maximum load: 13.8kg
- Tilt: -90 to 45°
- Swivel: 180°
- Rotation: 360°
- VESA: 75/100

Nine Monitor Stand
(Free Standing U Base with wider white arm)

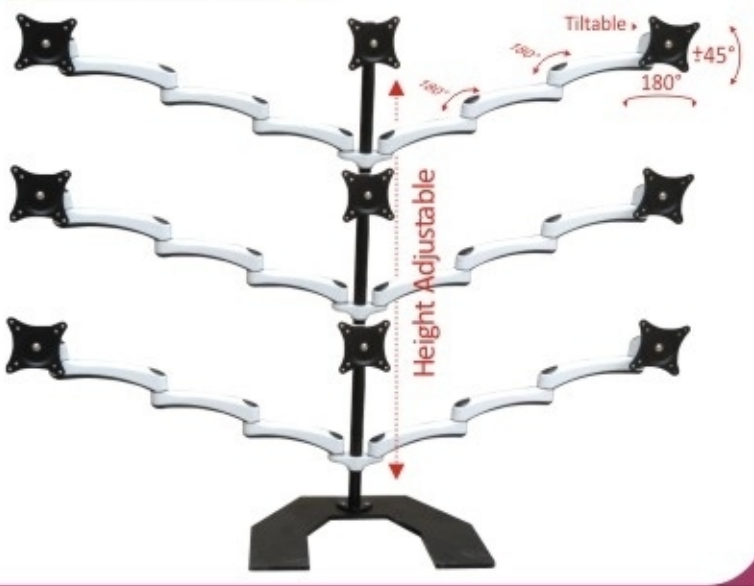

9MS - FW

Designs to support nine screens from one pole.

- 9 Monitors can be displayed side by side horizontally.
- Die cast aluminum structures
- Integrated cable management
- Easy assembly and disassembly
- Free standing with heavy metal base , requires no clamping or bolting to table
- Foldable arms enable rotation of corner monitor inwards to form a concave shape with 3 monitors for viewing comfort
- Holds monitors 15" to 24"
- Maximum load: 13.8kg
- Tilt: -90 to 45°
- Swivel: 180°
- Rotation: 360°
- VESA: 75/100

Nine Monitor Stand
(Free Standing U Base)

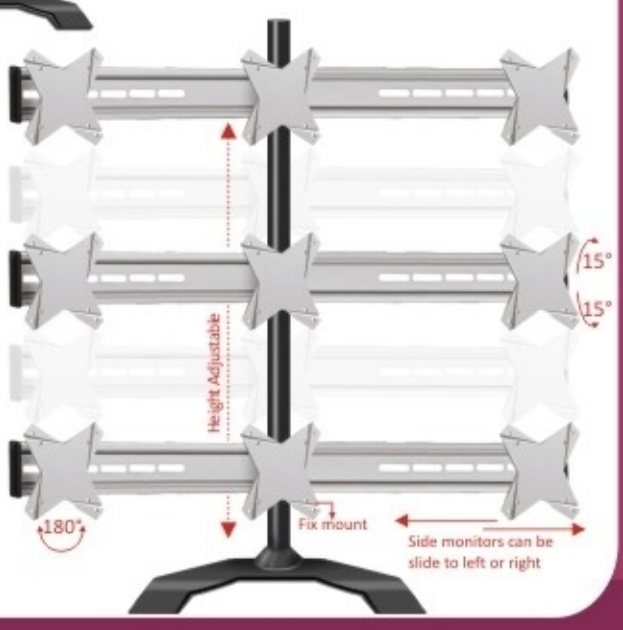

9MS - F

Designs to support nine screens from one pole.

- Pivots & mounts provides mounting and dismounting
- Quick set up and installation.
- 75mm and 100mm VESA compatible
- Pivots 15° up / 15° down for each monitor.
- Holds monitors 17" to 22".
- Pole height 30 inch.
- The space between the monitors are fully adjustable.
- Monitors can adjust in height, tilt, swivel & rotate.
- Arm is height adjustable.
- The height adjustment of arms is continuous along the pole. Just slide the clamp along the pole and adjust using the Allen wrench provided.
- Each mount can be tilted left, right, up & down. You can also rotate each monitor from portrait to landscape on the fly.

Nine Monitor Stand
(Free Standing with Wider Premium Arms)

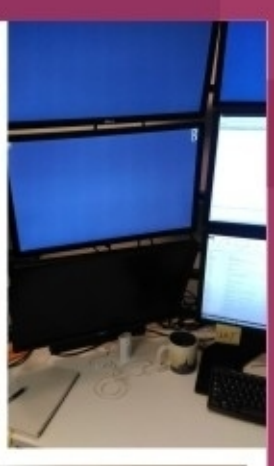

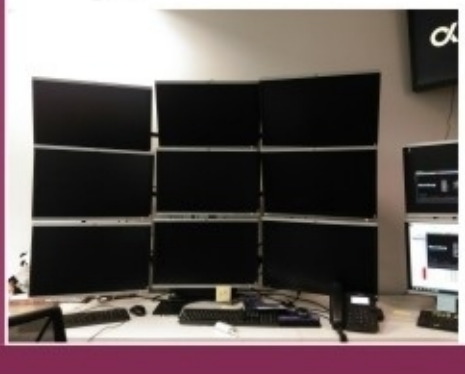

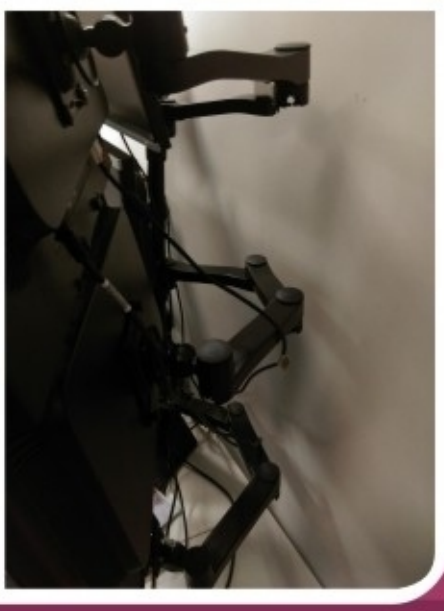

9MS - FP

Designs to support nine screens from one pole.

- Pivots & mounts provides mounting and dismounting.
- Quick set up and installation.
- Cable management system.
- 75mm and 100mm VESA compatible
- Tilt: -30° to +30°.
- Holds monitors 17" to 26" up to 25 lbs.
- Pole height 30 inch.
- The space between the monitors are fully adjustable.
- Monitors can adjust in height, tilt, swivel & can rotate.
- Arms are fully adjustable.
- The height adjustment of arms is continuous along the pole. Just slide the clamp along the pole.
- Each mount can be tilted left, right, up & down. You can also rotate each monitor from portrait to landscape on the fly.

Laptop Cum Monitor Arm NA-D3

LMA - CT

Designs to support monitor & Laptop from one pole.

Transform your table into an ergonomic laptop desk.

LCD monitor and laptop on a same pole to free your desktop space.

VESA 75 ×75mm or 100 ×100 mm compatible.

LCD monitors and Laptop computers can be easily adjusted to comfortable viewing height and positions.

360° rotatable Monitor Mounting for landscape or portrait views. 30° tilting of laptop tray for comfort viewing.

Aluminum arms can swivel 180° at each joint facilitating swing in and out of comfortable viewing.

Wire management.

Item weights 15.0 lbs.

Easy to install in minutes.

USB 2.0 UGA

DISPLAY CARD FOR TWO MONITORS

Adding a second screen is now as easy as adding the Multi-Display Adapter. With an additional screen, you can screen emails, chat, and work on your presentation, all at once without juggling, flipping or tabbing through open windows.

Features

- Connect 3+ monitors to any brand of laptop or desktop (one adapter required per monitor).
- Plug and play USB 2.0 connectivity to VGA, DVI, or HDMI monitors and projectors.
- Uses top-of-the-line DisplayLink DL-195 chip, supporting resolutions up to 2048x1152 / 1900x1200.
- Windows 7/Vista 32/64 and XP 32-bit drivers via Windows Update, download, or disk.
- NOT RECOMMENDED for use with Mac OS Lion (10.7). Linux configuration for advanced users only.

MULTI DISPLAY PCI CARD

DISPLAY CARD FOR FOUR MONITORS

QUAD PCI 4 HDMI -VGA PORTS CARD delivers a reliable hardware and software platform for a stable environment and robust IT management tools for seamless enterprise deployment.

EASY TO DEPLOY MULTI-DISPLAYS STATION WITH PLUG 'n DISPLAY" USB GRAPHICS

1. CONNECT Plug the USE Cable to the USE Port of your desktop to the Quad Display Station, connects all of the 3 Monitors and run the installation software.

2. EXPAND Add up to 3 additional Monitors to expand your workspace as you require.

QUADRUPLE DISPLAY WORKSTATION

DISPLAY STAND FOR FOUR MONITORS

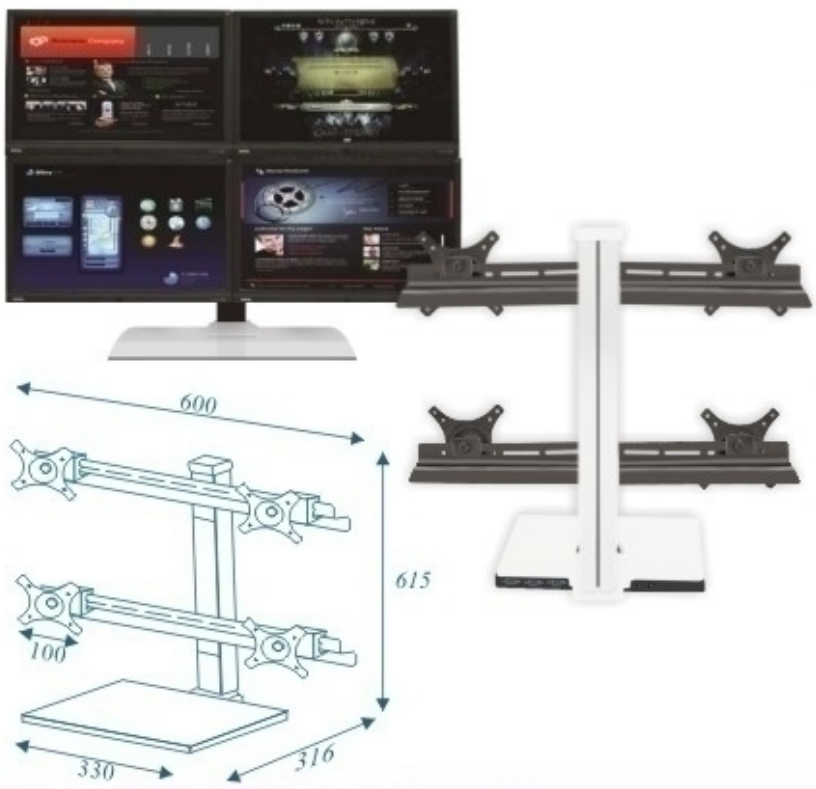

Add up to 3 extra monitors without buying complicated hardware of software.

Increase your desktop screen real estate to view more work or run various application simultaneously, minimize the need to print and compare documents.

Increase productive with up to 50% and get more work done in less time.

Improve your web and multimedia experience Support video resolution with maximum pixel of 1600x1200 or 1680x1050.

Support primary, mirror, rotate and extend display modes Lower power consumption with excellent total cost of ownership (TCO).

DC 12V operation Low power / DC 12V operation / plug & Display / 4 display monitor / support HD 720P

RIFE TECHNOLOGIES

Delhi Office:

362, Vardhman Plaza - II, J-Block, Community Centre, Rajouri Garden, New Delhi - 110027

(011) 2516-7799, 2592-5555
sales@rifeindia.com
www.rifeindia.com

HongKong Office:

Ergonomic Corporation (Hong Kong) Limited. 2nd floor Eton tower 8 , Hysen Avenue Causeway, Hongkong.

852 - 61819896
rishi@ergohongkong.com , ergohongkong@gmail.com
www.ergohongkong.com