FAUCET

Brushed Bronze Montpellier Shepherd's Crook Kitchen Mixer

Cod. **DA-MON004-1**
Shepherd's Crook Kitchen Mixer,
Electroplated Chrome

Cod. **DA-MON004-1BK**
Shepherd's Crook Kitchen Mixer,
Electroplated Matte Black

Cod. **DA-MON004-1BM**
Shepherd's Crook Kitchen Mixer,
PVD Brushed Bronze

Cod. **DA-MON004-1BN**
Shepherd's Crook Kitchen Mixer,
PVD Brushed Nickel

· TECHNICAL DRAWING ·

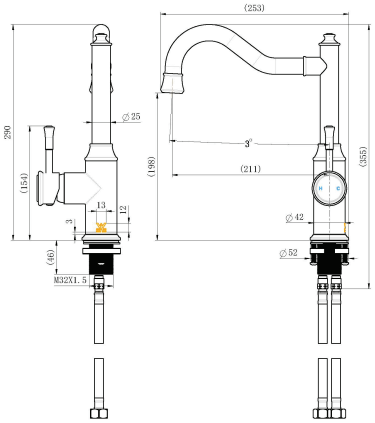

· SPECIFICATIONS ·

Model Number	MON004-1BM
Range	Montpellier
Type	Shepherd's Crook Kitchen Mixer
Features	35mm Cartridge
Flow Rate L / Min	6.0
WELS Registration Number	T36261(V)
Water Rating	5
Colour	PVD Brushed Bronze
Warranty	15 Year Cartridge Replacement 10 Year Product Replacement 1 Year Labour & Parts

For detailed information, please see our website www.dellarte.us

Legal disclaimer: The details provided by this technical file have an informational purpose, thus no contractual value. To obtain further information about the materials and the installation, please contact one of our sales advisors. DELL'ARTE Pty Ltd. reserves the right to modify or delete any information regarding its products. Weights, measurements and colours may be subject to small variations.

The copyright of this Fact Sheet, all content, graphic design and codes belongs to DELL'ARTE Pty Ltd. and therefore, reproduction, distribution, public communication, transformation or any other activity that can be done with the contents or even quoting the sources, without written consent is prohibited by DELL'ARTE Pty Ltd. All trade names, trademarks and distinctive signs of any kind on this Fact Sheet are property of their owners and are protected by law.