HEATED TOWEL RAILS

SQUARE MATTE BLACK ELECTRIC HEATED TOWEL RACK 9 BARS

Cod. **DA-OX09.S.HTR**
9 Bars, Matte Black

Cod. **DA-CH09.S.HTR**
9 Bars, Chrome

· TECHNICAL DRAWING ·

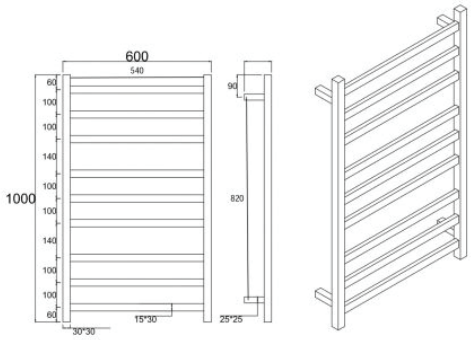

· SPECIFICATIONS ·

Square 9 Bars Electric Heated Towel Rail Towel Rack

Material: Stainless Steel

Dimensions: 1000x600x120mm

Rated Voltage: AC220-240V 50HZ

Power: 128 watts

Temperature of surface: 53-58 degrees

Takes 18-22 minutes to heat up

Waterproof IP Rating: IP55 RATING

Meet SAA certification

Plug Side: Both Left and Right available

Power line: 1.2m

Can be installed upside down if you need

For detailed information, please see our website www.dellarte.us

Legal disclaimer: The details provided by this technical file have an informational purpose, thus no contractual value. To obtain further information about the materials and the installation, please contact one of our sales advisors. DELL'ARTE Pty Ltd. reserves the right to modify or delete any information regarding its products. Weights, measurements and colours may be subject to small variations.

The copyright of this Fact Sheet, all content, graphic design and codes belongs to DELL'ARTE Pty Ltd. and therefore, reproduction, distribution, public communication, transformation or any other activity that can be done with the contents or even quoting the sources, without written consent is prohibited by DELL'ARTE Pty Ltd. All trade names, trademarks and distinctive signs of any kind on this Fact Sheet are property of their owners and are protected by law.