A-A

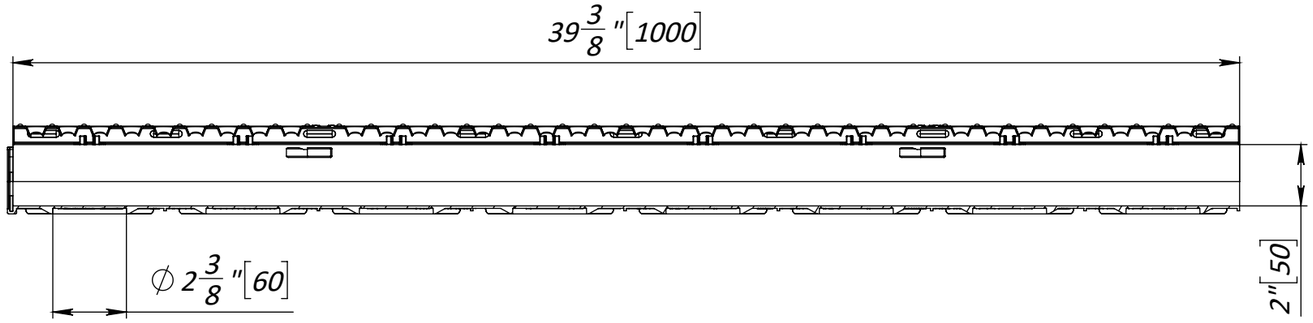

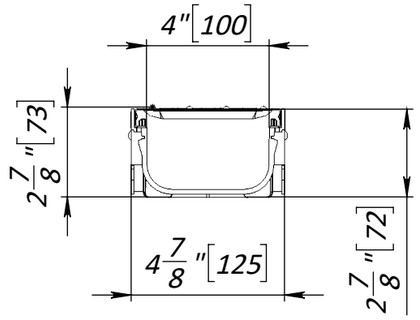

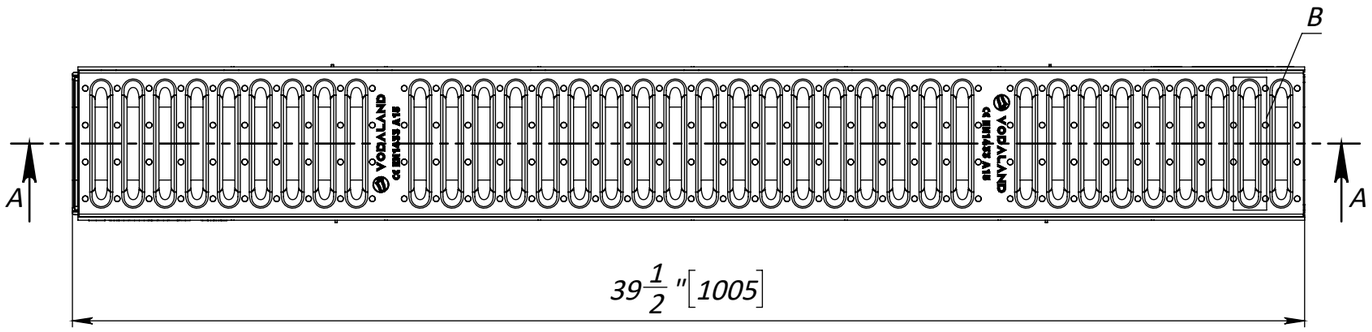

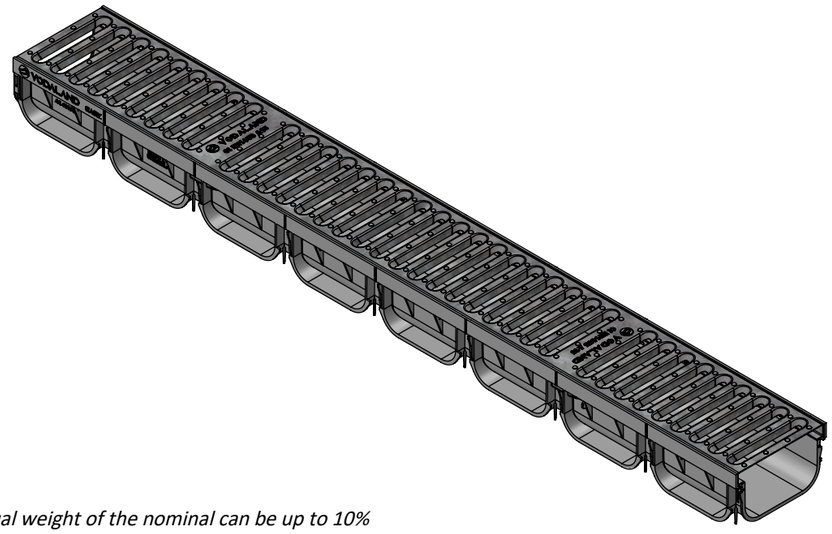

B (3 : 5)

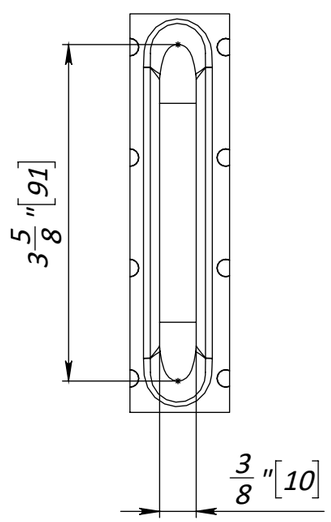

1. Deviation of the actual weight of the nominal can be up to 10%
2. Dimensions for reference inch, [mm]
3. Area of water intake slots 48.3 sq in [312.9 sq cm]

UNLESS OTHERWISE SPECIFIED:
DIMENSIONS ARE IN MILLIMETERS
SURFACE FINISH:
TOLERANCES: ISO 2768-c
LINEAR:
ANGULAR:

FINISH:

DO NOT SCALE DRAWING

REVISION

VODALAND

	NAME	SIGNATURE	DATE
DRAWN	LIL		18.10.22
CHK'D	LMK		
APPV'D			
MFG			
Q.A			

MATERIAL:

WEIGHT: 3.83 lb/1.74 kg

TITLE:

4'' Plastic channel Easy 2 H2.76'' with galvanized grate A15

Load class: A15

ARTICLE:

0881011

A3

SCALE: 1:5

SHEET 1 OF 1