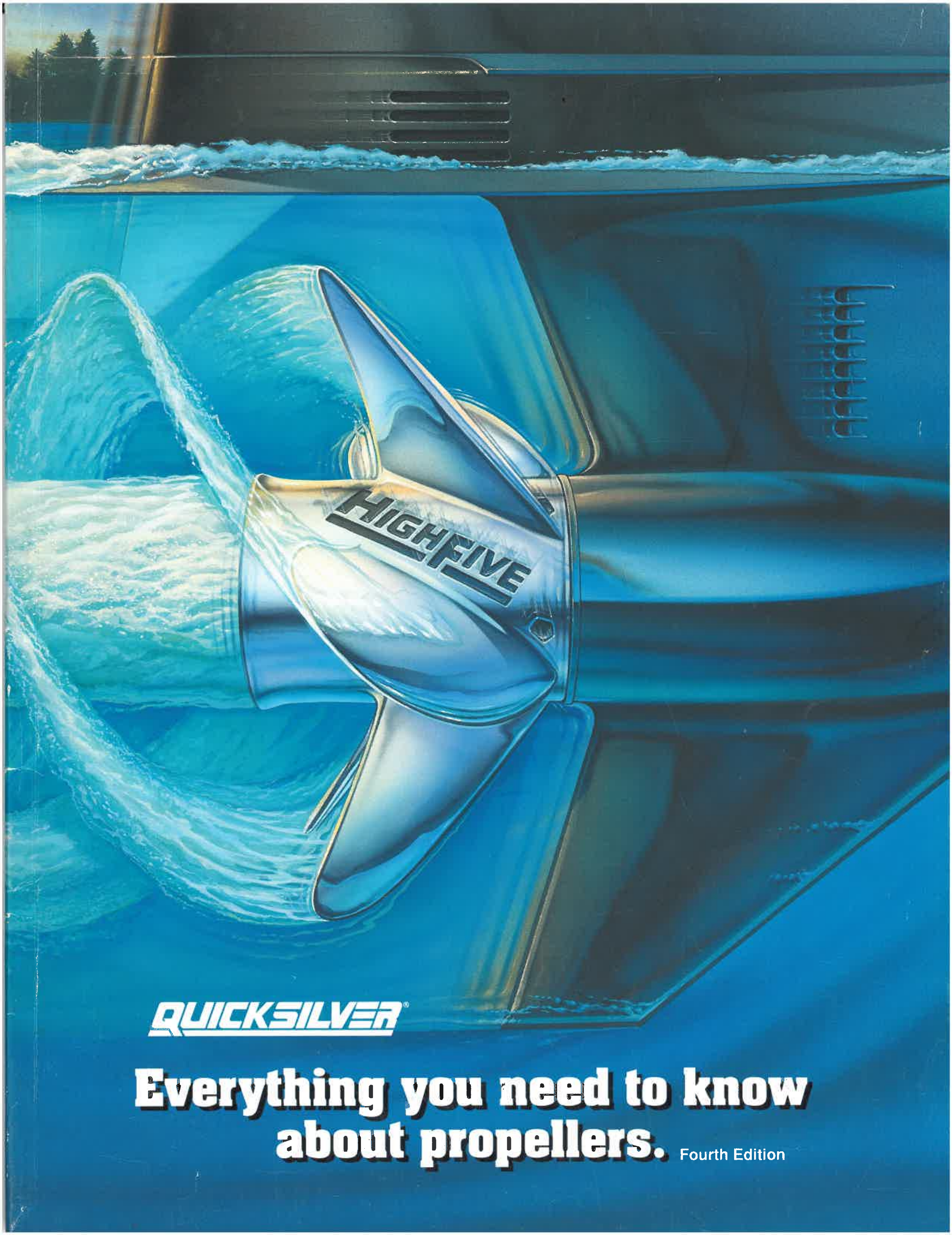

QUICKSILVER®

Everything you need to know about propellers.

Fourth Edition

Everything you need to know about propellers.

Fourth Edition

Preface

In determining boat performance, propellers are second in importance only to the power available from the engine itself. Without the propeller's thrust, nothing happens.

Your boat's propeller affects every phase of performance—handling, riding comfort, speed, acceleration, engine life, fuel economy, and safety.

Like tires on a car, the propeller conducts the power from the engine to the "road." Your propeller is the primary connection between your engine and the water. Which propeller or propellers you select to make that connection is critical to achieving optimum boat performance.

We wrote this book to help you make that choice wisely. We'll show you how a marine propeller works, and how engine and boat performance are directly related to the propeller.

Because propellers are vital to engine performance, Mercury Marine manufactures over 400 different and distinct Quicksilver® propellers for Mercury®, Mariner®, and Force® outboards and MerCruiser® stern drives. These range from the simplest plastic propellers for electric trolling motors to the blueprinted, custom-tuned Mercury Hi-Performance/Racing propellers. Each propeller is designed to maximize the performance return available from a specific engine or group of engines. We can assure this only through designing, engineering, and manufacturing our own propellers—over half a million a year—at dedicated facilities. Our engineering staff is the industry's most experienced in propeller design and innovation.

This book, now in its fourth edition, has been compiled from engineering data and factual engine and boat test results obtained from our on-the-water test sites. At the time of printing, this information represents the latest technology for marine pleasure boat and racing propellers.

This book is designed to provide even the novice boater a solid understanding of propellers. However, some of the information presented here is also very technical. So, if you have questions or need assistance in propeller selection, contact your local Mercury, Mariner, or Force outboard or MerCruiser stern drive and inboard dealer. Or write:

Quicksilver Propellers
P. O. Box 1939
Fond du Lac, WI 54936-1939

CHAPTER 1

History and Development

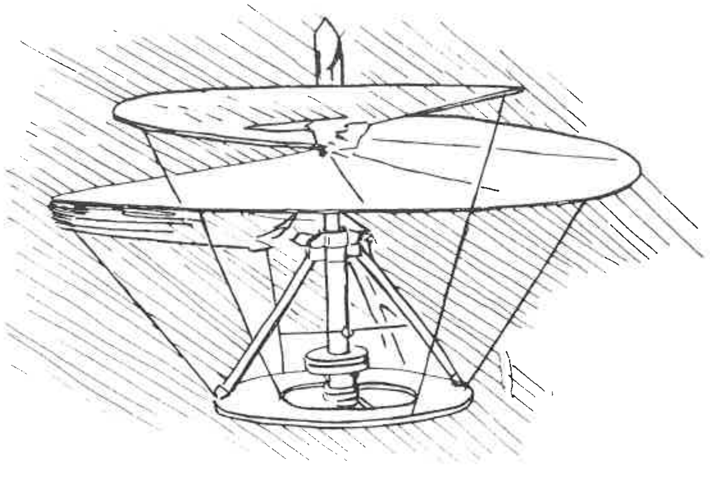

Leonardo's aerial screw or helicopter

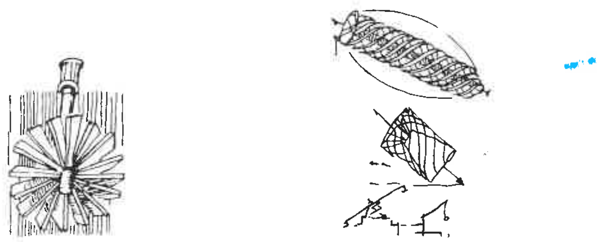

Reaction wheel

Moving spiral for raising water

Figure 1-1*
Leonardo da Vinci drawings

The concept of a propulsion device resembling what is now called the screw propeller is certainly not new. The experience of ancients with sculling oars, coupled with the later development of rotary engines, obviously suggested a combination of a series of inclined plates secured to a rotary hub. In 945 B.C., the Egyptians used a screw-like device for irrigation purposes. Archimedes (287-212 B.C.), the first scientist whose work had a lasting effect on the history of naval architecture and ship propulsion, has been credited with the invention of the screw. He created the screw to pump out flooded ships. The screw pump, designed by Archimedes for supplying irrigation ditches, was the forerunner of the screw propeller. Drawings done by Leonardo da Vinci (1452-1519) (Figure 1-1) contain pictures of water screws for pumping. However, his famous helicopter rotor more nearly resembles a marine screw.

Despite this knowledge, application of screw propulsion to boats and ships didn't take place until the advent of steam power. Due to greater suitability with the slow-turning, early steam engines, the first powered boats used paddle wheels for a form of water propulsion. In 1661, Toogood and Hays adopted the Archimedean screw as a ship propeller, although their boat design appears to have involved a type of water jet propulsion.

At the beginning of the 19th century, screw propulsion was considered a strictly second-rate means of moving a ship through the water. However, it was during this century that screw propulsion development got underway. In 1802, Colonel John Stevens built and experimented with a single-screw, and later a twin-screw, steam-driven boat. Unfortunately, due to a lack of interest, his ideas were not accepted in America.

The Invention of the Screw Propeller

The credit for the invention of the screw propeller narrows down to two men, Francis Petit Smith and John Ericsson. In 1836, Smith and Ericsson obtained patents for screw propellers, marking the start of modern development. Ericsson's patent covered a contra-rotating bladed wheel, as well as twin-screw and single-screw installations. Ericsson's propeller design took advantage of many of the unique benefits of the bladed wheel. With the wheel, it was possible to obtain the increased thrust of a large number of blades in a small diameter without cluttering up the area adjacent to the hub. Yet, both the inner and outer elements supplied propulsive thrust. The wheel design was inherently strong, without much unnecessary material to interfere with its basic action. The outer ring also served to keep lines, ice, and debris away from the blades. There is no clear-cut evolution of the bladed wheel into the modern screw propeller, although the bladed wheel possessed most of the elements of a successful propulsive device. It seems to have been used in the original Ericsson form and then dropped in favor of the conventional screw. (Figure 1-2)

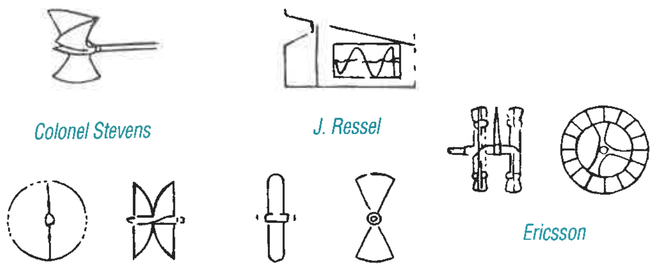

Figure 1-2*
Early propellers

The Fortunate Accident

Most of these Archimedian screw inventors suggested little to improve the configuration of the screw for use as a propulsion device. Their main variations consisted of changing the number of convolutions or altering the diameter along the length of the screw. Francis Petit Smith accidentally discovered the advantages of a shortened Archimedian screw. Originally, his wooden propeller design had two complete turns. But, following a collision on the Paddington Canal in which half of his blade was carried away, his boat immediately gained speed. Smith capitalized on his observation by increasing the number of blades and decreasing the blade width—for a design not unlike modern propellers. In 1839, impressed by the superior performance of Petit Smith's screw, I.K. Brunel changed the design of the Great Britain, an iron ship under construction, to screw propulsion. The Great Britain had 1500 indicated horsepower and achieved a speed of 11 knots. Despite this success, it was many years before screw propellers overwhelmingly displaced paddle wheels for seagoing applications.

The Next Step

Although the Archimedian screw in a wide variety of forms continued to be proposed for ship propulsion, the final transition of this type of propulsion device to what is now recognized as a screw propeller was made by George Rennie's conoidal screw. Rennie combined the ideas of increased pitch, multiple threads, and minimum convolutions in what he called a Conoidal propeller, which was patented in 1839.

Despite the successes of Smith and Ericsson, there were still many problems to be solved in the design, construction, and operation of screw-propelled ships. The early wooden-hulled ships were subjected to heavy vibration, and iron hulls were needed to resist the vibratory forces. With shaft and machinery below the waterline, stuffing boxes had to be developed to prevent leakage without damaging the rotating shaft. Thrust bearings were required to transmit the forward force exerted by the propeller to the hull. Higher speed engines had to be developed in order to realize the inherent efficiency of the screw, and techniques were needed for casting and machining strong, tough metals. As many problems were gradually overcome, and as higher speed engines were developed, more and more screw propellers were installed to supplement or replace paddle wheels.

In 1869, C. Sharp, of Philadelphia, Penn., patented a partially submerged propeller for shallow-draft boat propulsion. It employed a large yaw angle to offset the transverse force generated by the propeller, as well as high pitch and cambered or cupped blades. Sir Charles Parsons inadvertently discovered the phenomenon of propeller supercavitation when his first turbine ship, the Turbinia, initially failed to achieve its predicted speed of 30 knots due to the envelopment of the propeller blades in cavities. This problem was solved by fitting three propellers to each of three shafts. The invention of the marine reduction gear soon rendered multiple propellers per shaft unnecessary.

The End of the Paddle Wheel

Screw propellers installed in the 1860 era lacked refinement, but their performance exceeded all other devices conceived up to that time. The paddle wheel was gradually rendered obsolete in seagoing ships, as the screw propeller became practically the only type of propulsive device installed in seagoing ships. (Figure 1-3)

During the twentieth century, the art and science of marine propeller technology has steadily advanced in the direction of greater efficiency, more reliable design and performance prediction, improved materials, and cavitation resistance.

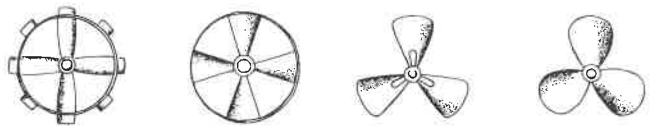

1800 1840 1860 1880

Figure 1-3*
Evolution of propeller development

---

*The figures are adapted from "Propellers for High-Performance Craft" by John L. Allison, *Marine Technology*, vol. 15, no. 4 (October 1978), with permission of the Society of Naval Architects & Marine Engineers.

CHAPTER
2

Basic Propeller Parts

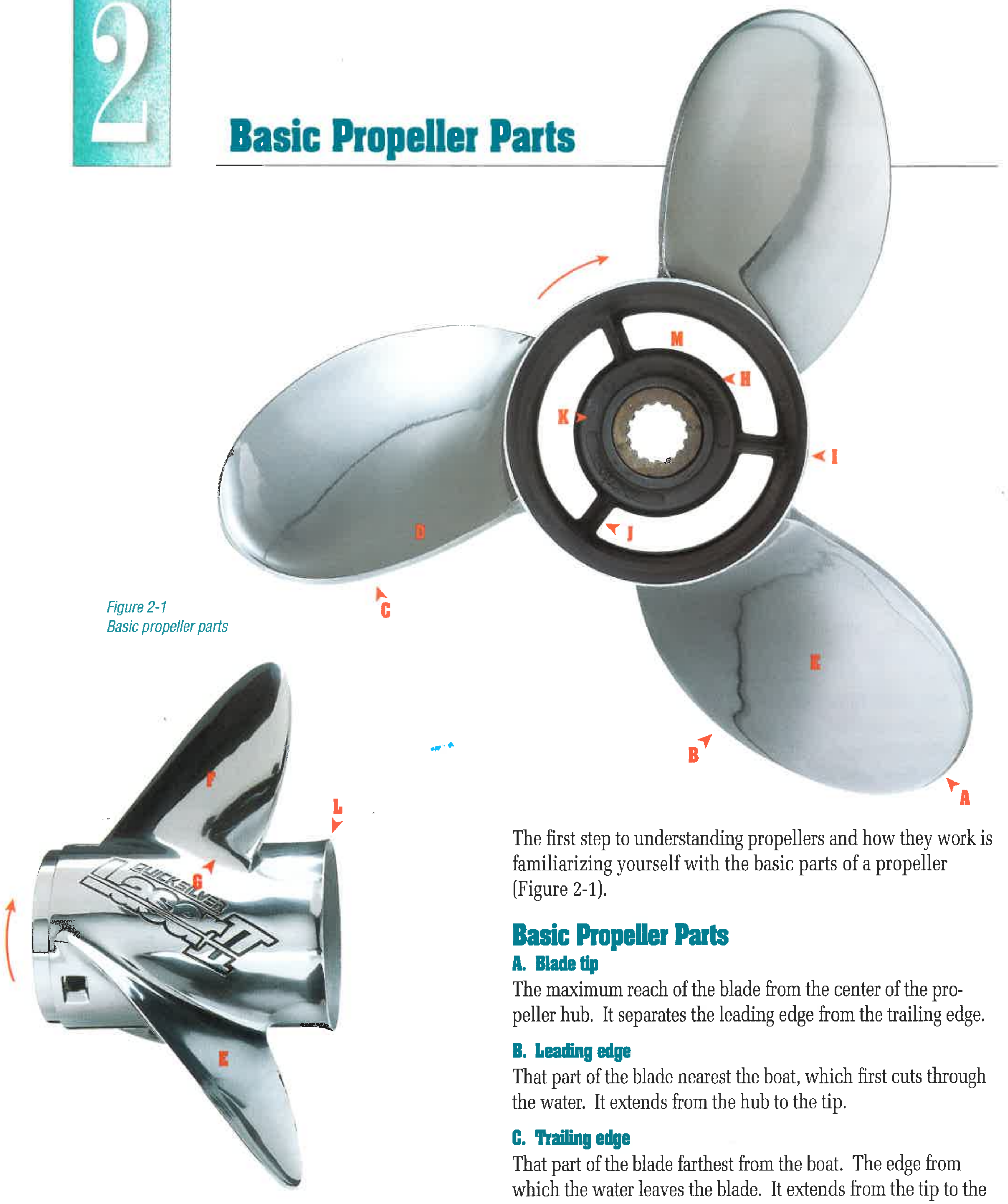

Figure 2-1
Basic propeller parts

The first step to understanding propellers and how they work is familiarizing yourself with the basic parts of a propeller (Figure 2-1).

Basic Propeller Parts

A. Blade tip
The maximum reach of the blade from the center of the propeller hub. It separates the leading edge from the trailing edge.

B. Leading edge
That part of the blade nearest the boat, which first cuts through the water. It extends from the hub to the tip.

C. Trailing edge
That part of the blade farthest from the boat. The edge from which the water leaves the blade. It extends from the tip to the hub (near the diffuser ring on through-hub exhaust propellers).

D. Cup
A small curve or lip on the trailing edge of the blade, permitting the propeller to hold water better and normally adding about 1/2" (12.7 mm) to 1" (25.4 mm) of pitch.

E. Blade face
That side of the blade facing away from the boat, known as the positive pressure side of the blade.

F. Blade back
The side of the blade facing the boat, known as the negative pressure (or suction) side of the blade.

G. Blade root
The point at which the blade attaches to the hub.

H. Inner hub
This contains the rubber hub (described below). The forward end of the inner hub is the metal surface which generally transmits the propeller thrust through the forward thrust hub to the propeller shaft and in turn, eventually to the boat.

I. Outer hub
For through-hub exhaust propellers. The exterior surface is in direct contact with the water. The blades are attached to the exterior surface. Its inner surface is in contact with the exhaust passage and with the ribs which attach the outer hub to the inner hub.

J. Ribs
For through-hub exhaust propellers. The connections between the inner and outer hub. There are usually three ribs, occasionally two, four, or five. The ribs are usually either parallel to the propeller shaft ("straight"), or parallel to the blades ("helical").

K. Flo-Torq™ shock-absorbing rubber hub
Rubber molded to an inner splined hub to protect the propeller drive system from impact damage and to flex when shifting the engine, to relieve the normal shift shock that occurs between the gear and clutch mechanism.

L. Diffuser ring
Aids in reducing exhaust back pressure and in preventing exhaust gas from feeding back into propeller blades.

M. Exhaust passage
For through-hub exhaust propellers. The hollow area between the inner hub and the outer hub through which engine exhaust gases are discharged into the water. In some stern drive installations using a through-transom exhaust system, this passage carries air.

Hub Configurations

At the center of the propeller is the hub. If exhaust gases are discharged into the water through the hub, the propeller is called a through-hub exhaust (or Jet-Prop™ exhaust) propeller. This type of hub is detailed in Figure 2-2. Note the Flo-Torq shock-absorbing rubber hub.

If exhaust gases are not discharged into the water through a passage in the hub, but rather over the hub, the propeller is called an over-the-hub exhaust (or non-Jet-Prop exhaust) propeller. This design allows the engine to wind up quickly as the propeller bites into water and exhaust. Top speed may improve due to the reduction in drag associated with the outer hub, but generally acceleration suffers slightly. There are two types: one with a Flo-Torq rubber hub (round or square) (Figure 2-3), the other with a solid hub (Figure 2-4). Solid-hub propellers are generally used on racing engines, which usually do not have a gear shift, so don't experience the shock that occurs between the gear and clutch mechanism with normal shifting.

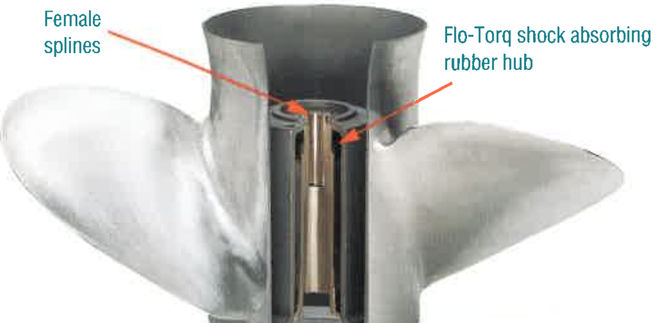

Figure 2-2
Rubber-hub propeller

Figure 2-3
Round and square rubber hubs

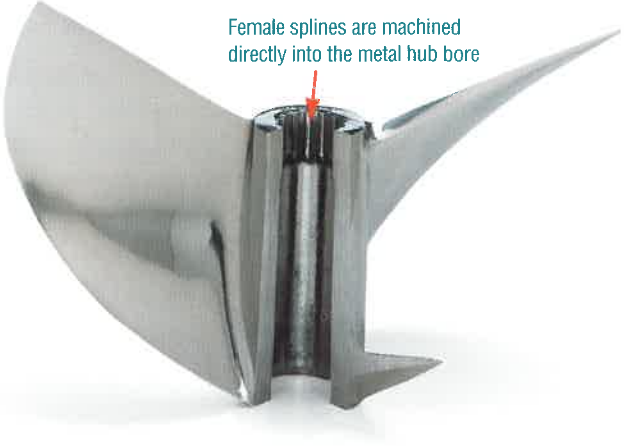

Figure 2-4
Solid-hub propeller

CHAPTER 3

How Propellers Work

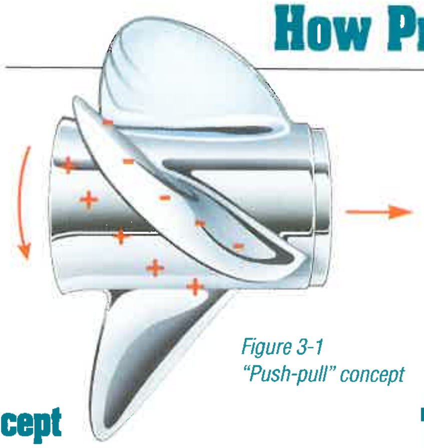

Figure 3-1
"Push-pull" concept

The "Push/Pull" Concept

To understand this concept, let us freeze a propeller just at the point where one of the blades is projecting directly out of the page (Figure 3-1). This is a right-hand rotation propeller, whose projecting blade is rotating from top to bottom and is moving from left to right. As the blade in this discussion rotates or moves downward, it pushes water down and back as is done by your hand when swimming. At the same time, water must rush in behind the blade to fill the space left by the downward moving blade. This results in a pressure differential between the two sides of the blade: a positive pressure, or pushing effect, on the underside and a negative pressure, or pulling effect, on the top side. This action, of course, occurs on all the blades around the full circle of rotation as the engine rotates the propeller. So the propeller is both pushing and being pulled through the water.

Thrust/Momentum

These pressures cause water to be drawn into the propeller from in front and accelerated out the back, just as a household fan pulls air in from behind it and blows it out toward you (Figure 3-2).

The marine propeller draws or pulls water in from its front end through an imaginary cylinder a little larger than the propeller diameter (Figure 3-3). The front end of the propeller is the end that faces the boat. As the propeller spins, water accelerates through it, creating a jet stream of higher-velocity water behind the propeller. This exiting water jet is smaller in diameter than the actual diameter of the propeller.

This water jet action of pulling water in and pushing it out at a higher velocity adds momentum to the water. This change in momentum or acceleration of the water results in a force which we can call thrust.

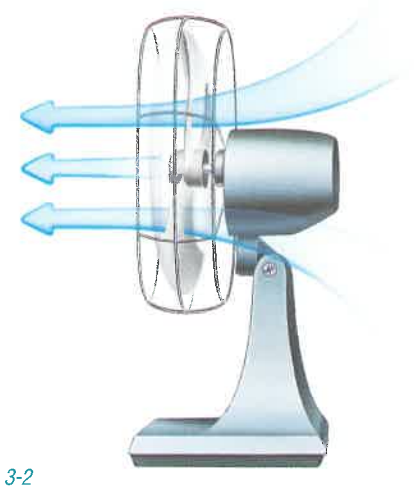

Figure 3-2
Airflow through a fan is similar to waterflow through a propeller.

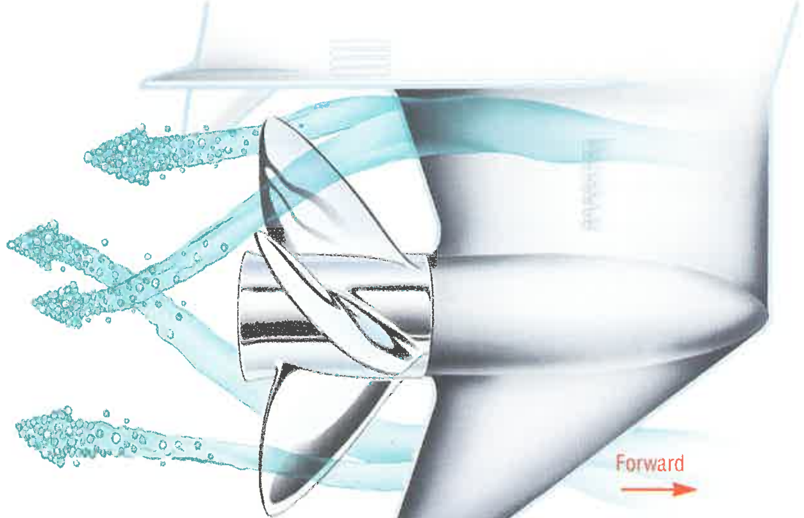

Figure 3-3
Thrust development

CHAPTER 4

Propeller Terminology

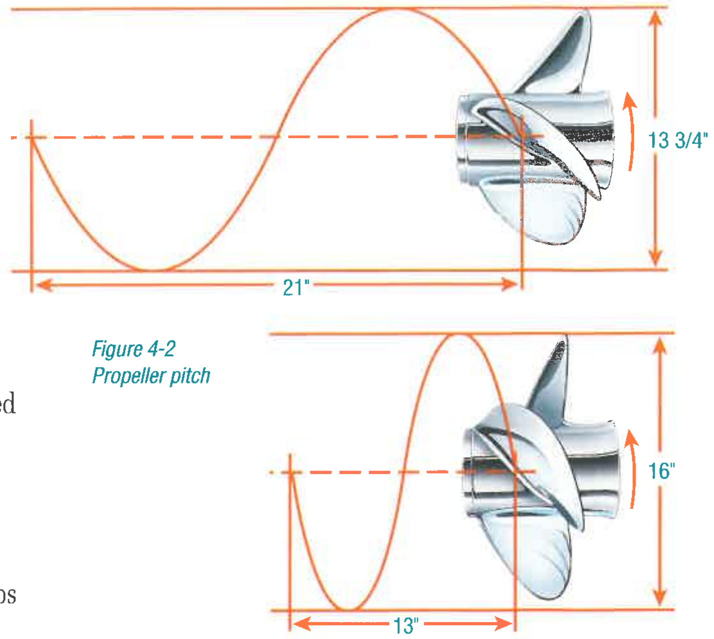

Figure 4-2
Propeller pitch

There are a variety of terms used to describe propeller characteristics as well as performance attributes. These are used throughout this book. So, it is important that you have a good understanding of them, as detailed here.

Diameter

Diameter is the distance across the circle made by the blade tips as the propeller rotates (Figure 4-1).

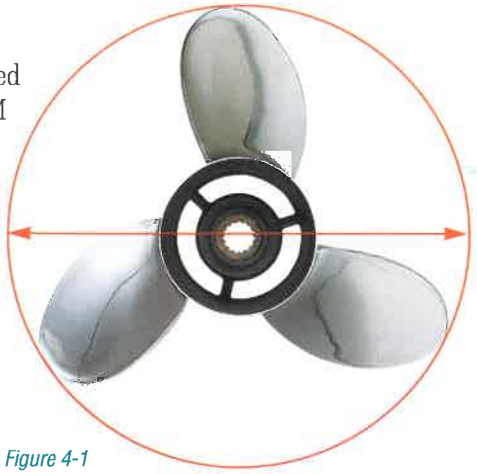

Figure 4-1
Propeller diameter

Diameter is determined primarily by the RPM at which the propeller will be turning and the amount of power that will be delivered to the propeller through the shafts and gears. The degree to which the propeller may operate in a partially surfaced condition, as well as the intended forward velocity, will also play a role in determining the most desirable diameter. Within a given propeller line, the diameter usually increases for propellers used on slower boats and decreases for faster boats. If all other variables remain constant, diameter will increase as power increases; diameter will increase as propeller RPM decreases (slower powerhead or engine speed and/or more gear reduction); and diameter should increase as propeller surfacing increases.

Pitch

Pitch is the distance that a propeller would move in one revolution if it were moving through a soft solid, like a screw in wood (Figure 4-2).

When a propeller is identified as 13 3/4 x 21, it has a 13 3/4" (35 cm) diameter with 21" (53 cm) of pitch. Theoretically, this propeller would move forward 21" in one revolution.

Pitch is measured on the face of the blade (Figure 4-4). A number of factors can cause the actual pitch of a propeller to vary from the advertised pitch stamped on it. Minor distortion may have occurred during the casting and cooling process. Adjustments or modifications may have been made by propeller repair stations. And finally, undetected damage may have altered the pitch.

There are two common types of pitch: constant (also called "true" or "flat") pitch and progressive pitch (Figure 4-3). Constant pitch means the pitch is the same at all points from the leading edge to the trailing edge. Progressive pitch (also called blade "camber") starts low at the leading edge and progressively increases to the trailing edge. The pitch number assigned (for example, 21") is the average pitch over the entire blade.

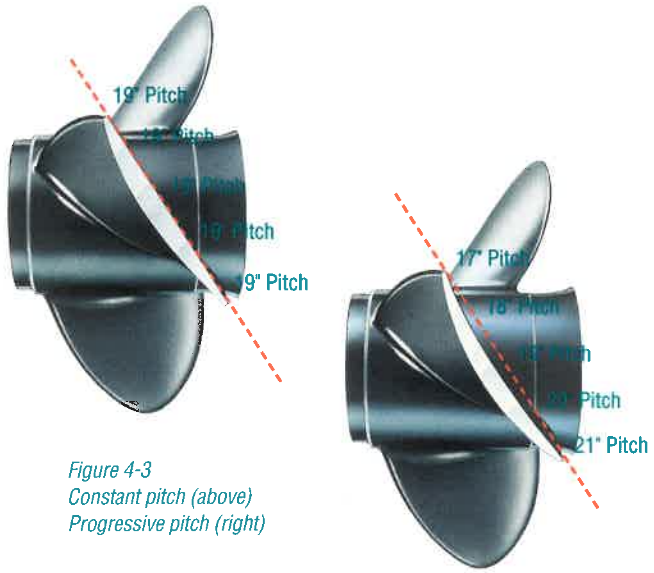

Figure 4-3
Constant pitch (above)
Progressive pitch (right)

Progressive pitch improves performance when forward and rotational speed are high and/or the propeller is operating high enough to break the water surface. It is commonly used on mid- to high-horsepower Quicksilver propellers.

Pitch is rather like another set of gears. For a given engine that wants to run at a given RPM, the faster the boat can go, the higher the pitch you need. If you select too low a pitch, the engine RPM will run too high (above the top of the recommended limit), putting an undesirable higher stress on many moving parts. You may have great acceleration but your top speed will probably suffer and your propeller efficiency will definitely suffer. If you select too high a pitch you will force your engine to lug at a low RPM (below the recommended range) which is generally at a higher torque level and can be very damaging to your engine. Top speed may not suffer too much, but acceleration will be seriously reduced.

Rake

When a propeller blade is examined on a cut extending directly through the center of the hub, as in Figure 4-4, the face side of the cross section of that cut blade relative to a plane that is perpendicular to the propeller axis would represent blade rake (Figures 4-5, 4-6, and 4-7).

Figure 4-4
A. Propeller pitch line
B. Propeller rake line

If the face of the blade is perpendicular to the propeller hub (Figure 4-5), the propeller has 0° rake. As the blade slants back toward the aft end of the propeller, blade rake increases (Figure 4-6). With standard propellers, the rake angle varies from -5° to 20°. Basic propellers for outboard engines and stern drives commonly have around 15° of rake. Higher-raked (high-performance) propellers often have progressive rake which may go as high as 30° at the blade tip.

Rake is either flat (straight) as shown in Figures 4-5 and 4-6, or curved (progressive) as shown in Figure 4-7.

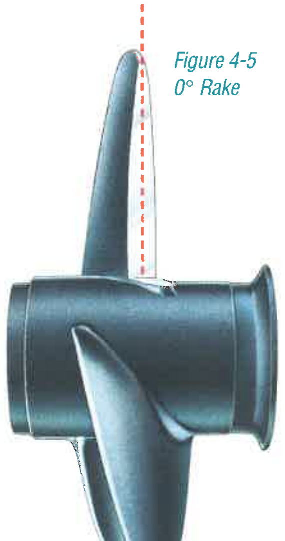

Figure 4-5
0° Rake

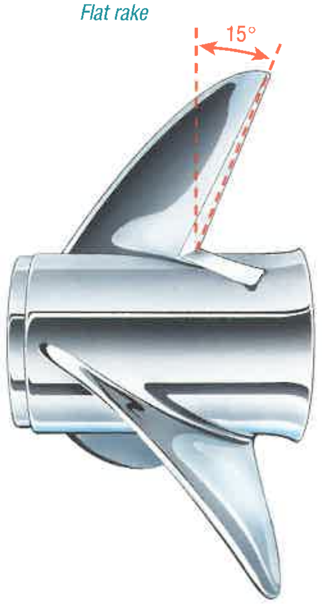

Figure 4-6
Flat rake

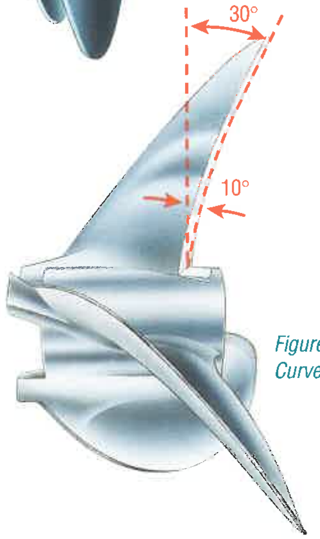

Figure 4-7
Curved (progressive) rake

A higher rake angle generally improves the ability of the propeller to operate in a cavitating or ventilating situation, such as when the blades break the water's surface. With such surfacing operation, higher blade rake can better hold the water as it is being thrown off into the air by centrifugal force, and in doing so, creates more thrust than a similar but lower raked propeller. On lighter, faster boats, with a higher engine or drive transom height, higher rake often will increase performance by holding the bow of the boat higher, resulting in higher boat speed due to less hull drag.

However, with some very light, fast boats, higher rake can cause too much bow lift, making these boats more flighty or less stable, in which case a more moderately raked propeller would be a better choice.

Cupping

When the trailing edge of the blade is formed or cast with an edge curl (away from the boat), it is said to have a cup (Figure 4-8). Originally, cupping was done to gain the same benefits as just described for progressive pitch and curved or higher rake. However, cupping benefits are so desirable that nearly all modern recreational, high-performance or racing propellers contain some degree of cup.

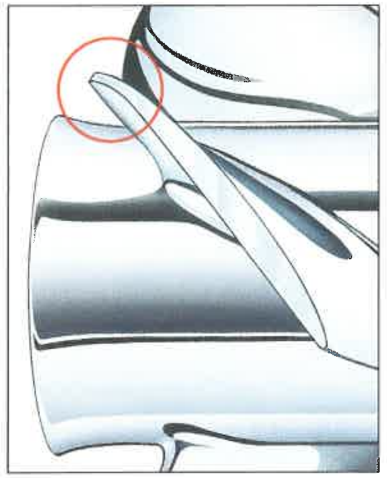

Figure 4-8
Cupping

Cupping usually will reduce full-throttle engine speed about 150 to 300 RPM below the same pitch propeller with no cup. A propeller repair shop can increase or decrease cup to alter engine RPM to meet specific operating requirements on most propellers.

For a cup to be most effective, it should be completely concave (on the face or pressure side of the blade) and finish with a sharp trailing edge. Any convex rounding of the trailing edge of the cup, on the pressure side, detracts from its effectiveness.

Cupping is usually of little value on propellers used in heavy-duty or work applications where the propeller remains fully submerged.

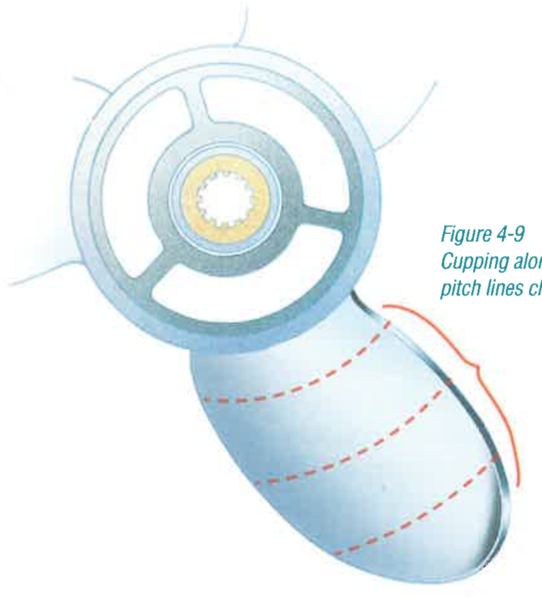

Figure 4-9
Cupping along
pitch lines changes pitch.

Importance of Cup Location

Using a round-bladed propeller as an example, if the cupped area intersects pitch lines, as in Figure 4-9, it will increase blade pitch. Cupping in this area will reduce RPM by adding pitch. It will also protect somewhat against propeller "blowout" (see Cavitation, page 11).

If the cup is placed so that it intersects rake lines, Figure 4-10, it then has the effect of increasing rake (see Rake, page 7).

There is clearly some overlap where cup affects both pitch and rake.

In some cases, adding a normal cup has reduced engine RPM by an unusually high number, as much as 1000 RPM. This can happen if the uncupped propeller was running partially "blown out," a situation not uncommon and often undetected until a cupped propeller is tried. A partially blown-out propeller has a mushy, somewhat unresponsive feel, and may produce excessive propeller spray. An accurate slip calculation (see Slip, page 13) can be beneficial here. Slip will generally jump from its normal 10% to 15% to over 20% for a partially blown-out propeller (on an average- to lightweight boat).

Adjusting the cup on a cleaver-style propeller (see Cleaver, page 20) is more difficult. Since the trailing edge is very thick and runs straight out on a rake line, any adjustment will have far less effect on altering rake (Figure 4-11).

Figure 4-11
Cupping on cleaver-style propeller

The added pitch created by the cup can be reduced substantially by filing or grinding away some of the cup. At the same time, rake can be altered slightly. For less rake, decrease the cup in the area close to the tip. For more rake, reduce the cup in the area close to the hub. Obviously, any cup reduction will also result in an RPM increase.

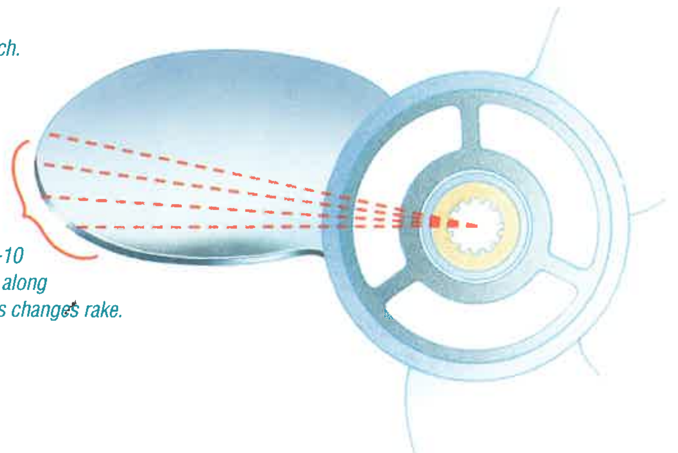

Figure 4-10
Cupping along
rake lines changes rake.

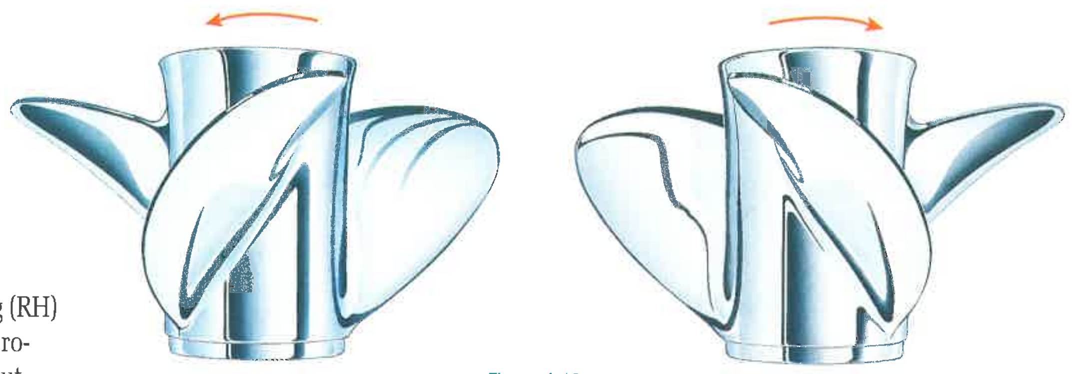

Right-hand rotation

Figure 4-12

Left-hand rotation

Rotation ("Hand")

There are right-hand rotating (RH) and left-hand rotating (LH) propellers (Figure 4-12). Most outboard and stern drive propellers are right-hand rotation.

To recognize a right-hand propeller, observe the prop from a position shown in Figure 4-12 (resting on either end of the hub is OK) and note that the right-hand propeller blade slants from lower left to upper right. A left-hand propeller will have the opposite slant—from lower right to upper left. The blade slopes or climbs up in the direction of rotation. A right-hand rotation propeller has the same basic blade slope as the threads on a common right-hand screw.

Another method of recognition is to observe the propeller rotating in forward gear from behind the boat. A right-hand propeller turns clockwise; a left-hand propeller turns counterclockwise.

Number of Blades

A single-blade propeller would be the most efficient—if the vibration could be tolerated. So, to get an acceptable level of balance with much less vibration, a two-bladed propeller, practically speaking, is the most efficient. As blades are added, efficiency decreases, but so does the vibration level (Figure 4-13). Most propellers are made with three blades as a compromise for vibration, convenient size, efficiency, and cost. The efficiency difference between a two- and a three-bladed propeller is considered less significant than the vibrational difference. Nearly all racing propellers are presently either three- or four-bladed.

In recent years, with the growing frequency of propellers being run at an increased height (surfaced), four- and five-bladed props have become more popular. They suppress the higher level of vibration and improve acceleration by putting more blade area into the water. They can also help to make the rake more effective in lifting the bow of the boat for added speed.

1-blade propeller 2-blade propeller 3-blade propeller 4-blade propeller 5-blade propeller

Figure 4-13
As blades are added, efficiency and vibration level decrease.

Blade Thickness

Like a tree limb growing from a tree trunk, a blade is thickest at the point where it meets the hub (blade root). As the blade moves out from the hub to the tip, it becomes thinner (Figure 4-14). The basic reason for this is that, as with any cantilever beam, the load that any blade or beam section must support is the load on the blade or beam between that section and the tip of the blade. Thus, at the tip there is zero load requiring zero thickness. However, to be practical, a given minimum edge thickness is chosen for a given propeller material and type of use.

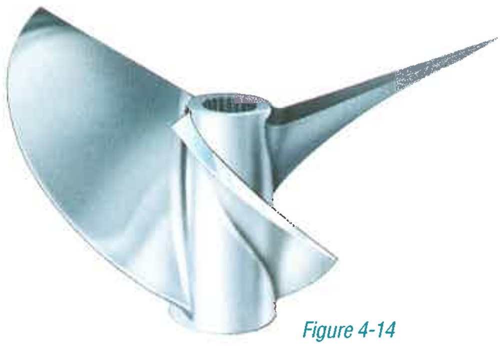

Figure 4-14
Blade thickness

Since there is only so much power available, blades should be as thin as practical (considering the strength of their material) because it takes more power to push a thick blade through the water than a thin blade.

But what about the thickness variation from the leading to trailing edge? When viewing a common blade cutaway at a given radius from the center of a constant pitch-propeller (Figure 4-15), an approximate flat surface will be observed on the positive (pressure) side and a circular arc surface on the negative (suction) side, with the thickest point in the center. Edges usually are .06" to .08" (1.5 mm to 2.0 mm) thick for aluminum propellers, thinner for stainless steel.

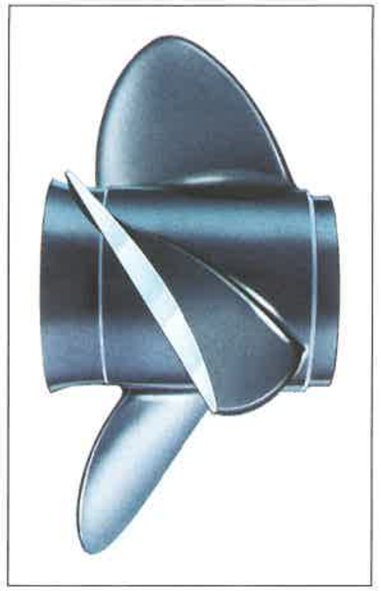

Figure 4-15
Common propeller blade

For propellers intended to run partially surfaced, as in racing applications, the "cleaver" blade shape (see Figure 4-14) is popular. Its blade section is usually a wedge. Blades with a thick trailing edge such as this should only be run surfaced. When they are run deep, where surface air can't ventilate the low-pressure cavitation pockets formed behind the thick trailing edge, they are less efficient.

Blade Contour

Contour is the shape of the blades as viewed from directly over the blade face or back. The contour is generally completely rounded, commonly called "round-eared" or shaped with a straight trailing edge, commonly called a "cleaver."

Skew

A blade that is swept back versus a blade that is radially symmetrical in contour is said to have skew (Figure 4-16). Considerable skew (sweep back) is helpful in allowing a propeller to more easily shed weeds. Higher skew on a surfacing application will reduce the pounding vibration of a propeller blade re-entering the water.

Figure 4-16
Propeller with considerably skewed blades (left)
Propeller with very little skew to the blades (right)

Figure 4-17
Ventilation: air being sucked into propeller

Ventilation

Ventilation occurs when air from the water's surface or exhaust gases from the exhaust outlet are drawn into the propeller blades (Figure 4-17). The normal water load is reduced and the propeller over-revs, losing much of its thrust; however, as the propeller momentarily over-revs, this brings on massive cavitation (see Cavitation, following), which can further "unload" the propeller and stop all forward thrust. It continues until the propeller is slowed down enough to allow the bubbles to surface, and the original cause of cavitation is eliminated. This action most often occurs in turns, particularly when trying to plane in a sharp turn or with an excessively trimmed-out engine or drive unit.

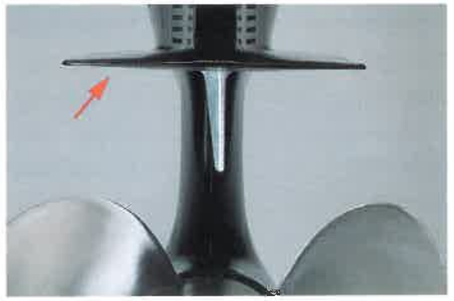

Figure 4-18
Antiventilation plate

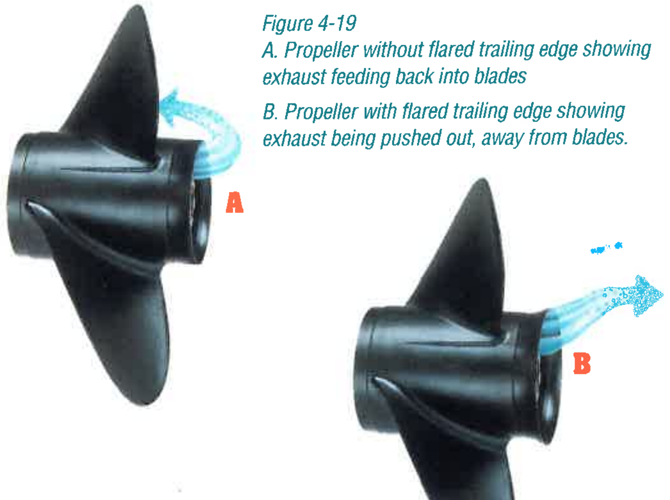

Figure 4-19
A. Propeller without flared trailing edge showing exhaust feeding back into blades
B. Propeller with flared trailing edge showing exhaust being pushed out, away from blades.

Figure 4-20
Cavitation burn

Outboard engines and stern drive units are designed with a large "antiventilation" plate cast integrally into the gear housing (also commonly called the "gearcase") directly above the propeller (Figure 4-18). This plate is frequently, but incorrectly, referred to as a "cavitation" or "anticavitation" plate. The purpose of this plate is to eliminate or reduce the possibility of air being drawn from the surface into the negative pressure side of the propeller blades.

For improved engine and boat performance, most Quicksilver propellers feature a hub design with a flared trailing edge or "diffuser ring." This assists exhaust gas flow and provides a high-pressure barrier that helps prevent exhaust gases from feeding back into the negative pressure side of the blades (Figure 4-19), which is another form of ventilation.

Cavitation

We all know that water boils at 212°F (100°C) at normal sea-level atmospheric pressure. But water also boils at room temperature if the atmospheric pressure is low enough.

As a shape passes through water at an increasing speed, the pressure that holds the water to the sides and back of the shape is lowered. Depending upon the water temperature, when the pressure reaches a sufficiently low level, boiling (i.e., the formation of water vapor) will begin. This occurs most often on a propeller near the leading edge of the blade. When speed is reduced and the pressure goes up, boiling will subside. As the water vapor bubbles move downstream into a higher-pressure region that won't sustain boiling, they collapse (condense back to liquid). The collapsing action, or implosion, of the bubbles releases energy that chips away at the blades, causing a "cavitation burn" or erosion of the metal (Figure 4-20).

The initial cause of the low pressure may be nicks in the leading edge, too much cup, sharp leading edge corners, improper polishing, or, sometimes, poor blade design. Massive cavitation by itself is rare, and it usually is caused by a propeller that is severely bent or has had its blade tips broken off resulting in a propeller that is far too small in diameter for the engine. (See Ventilation, above, for another common cause.)

The cross section of a propeller blade in Figure 4-21 shows an example of one cause of cavitation. In this instance, a sharp leading edge produces cavitation and resulting cavitation burn as the bubbles condense further back on the blade face. Such cavitation burn can usually be corrected by repairing or rounding off the leading edge directly in front of the burn. Cavitation and cavitation burns can also form on the side of your gearcase. This will almost always be the result of a sharp edge directly ahead of the burn. Rounding off the sharp edge will usually eliminate the problem.

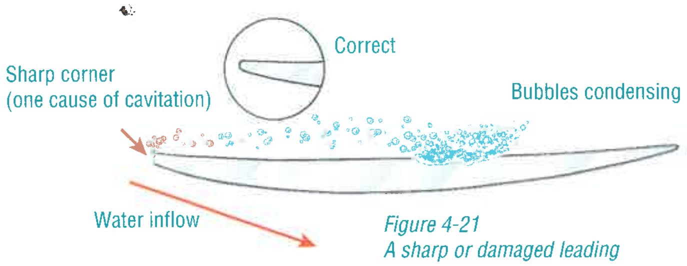

Figure 4-21
A sharp or damaged leading edge can cause cavitation

Angle of Attack

To further understand how propellers work, it is important to appreciate the concept of "angle of attack." (This concept is also important in understanding propeller slip, detailed on page 13.) To do so, it is helpful to compare how a propeller blade works to how an airplane wing functions. The wing of an airplane and its ability to carry the weight of the plane by providing lift is very similar to the spiraling travel of a propeller blade, which provides thrust.

If a wing with a symmetrical airfoil (Figures 4-22 and 4-23) is moved through the air so that air moves symmetrically above and below the wing, there is equal pressure above and below resulting in no "lift." The wing is said to be operating at zero degree (0°) angle of attack.

Figure 4-22
Wing with no angle of attack

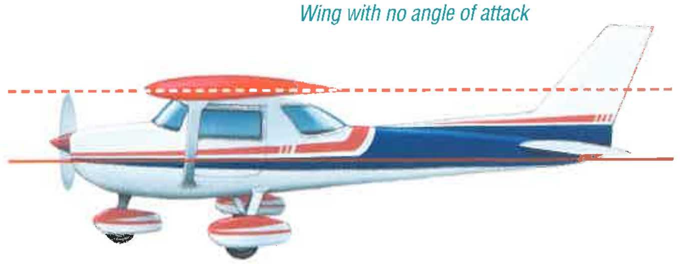

Figure 4-23
No angle of attack results in no lift (will not fly).

With an angle of attack (Figures 4-24 and 4-25), there is a pressure change or difference above and below the wing which creates lift: negative (lower) pressure on the top and positive (higher) pressure below.

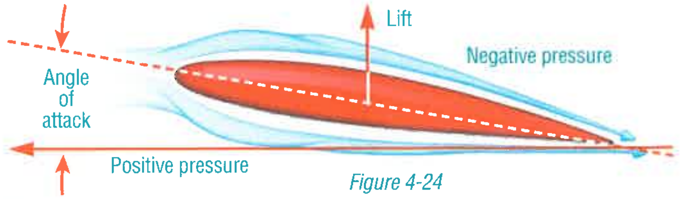

Figure 4-24
Wing with angle of attack

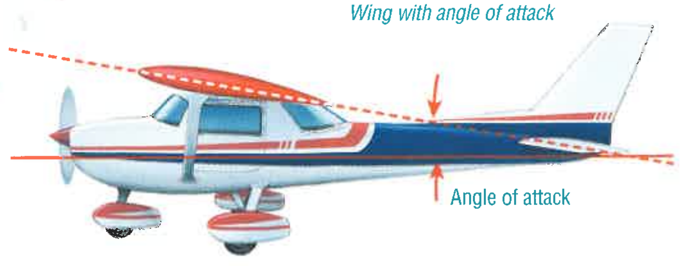

Figure 4-25
Angle of attack creates a pressure difference resulting in lift.

Although it is clear that the airplane wing and the propeller blade move *through* air and water respectively, marine engineers prefer to talk about the situation in terms of the water moving *into* the blade. Allowed that freedom, consider Figures 4-26 and 4-27, which show the same angle of attack phenomenon, only in this case, for the propeller blade.

Figure 4-26 shows blades operating at zero angle of attack. This creates no positive or negative pressures on the blade; therefore, there can be no lift or thrust. Blades operating with some angle of attack (Figure 4-27) create a negative (lower or pulling) pressure on one side and a positive (higher or pushing) pressure on the other side. The pressure difference causes lift at approximately right angles to the blade surface. Lift can be divided into a *thrust* component in the direction of travel and a *torque* component in the opposite direction of propeller rotation.

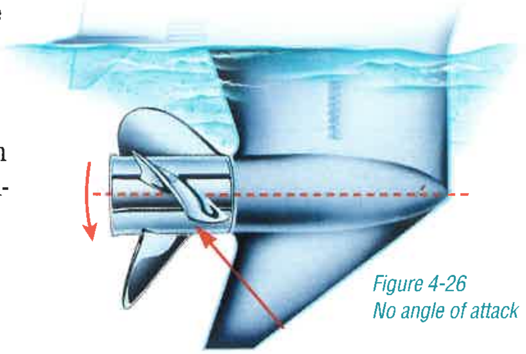

Figure 4-26
No angle of attack

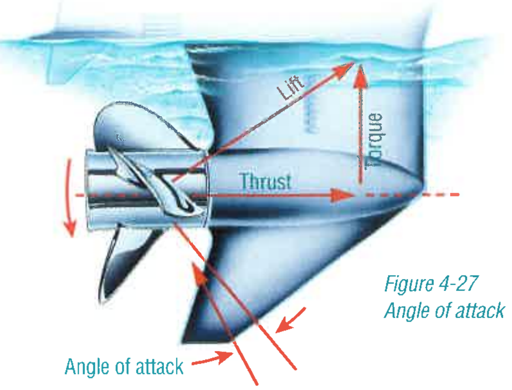

Figure 4-27
Angle of attack

Slip

Slip is the most misunderstood of all propeller terms, probably because it sounds like something undesirable. Slip is not a measure of propeller efficiency (see Efficiency, page 15). Rather, slip is the difference between actual and theoretical travel resulting from a necessary propeller blade angle of attack (see Angle of Attack, page 12). For example, in Figure 4-28, a 10" propeller actually advances only 8-1/2" in one revolution. Eight and one-half inches is 85% of 10", leaving a slip of 15%. If the blade had no angle of attack, there would be no slip; but, of course, there would be no positive and negative pressure created on the blades and, therefore, there would be no thrust.

Slip is the difference between actual and theoretical travel resulting from some angle of attack.

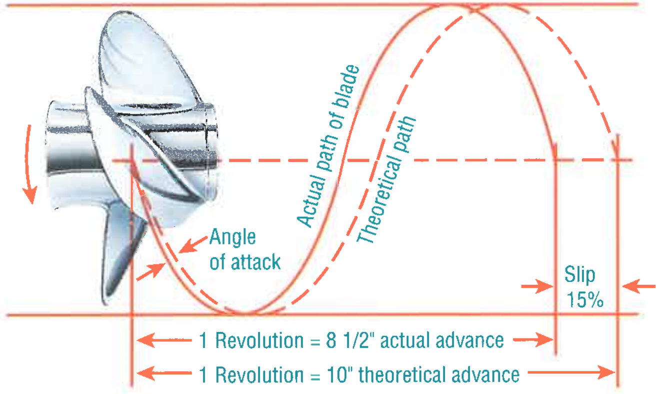

Figure 4-28

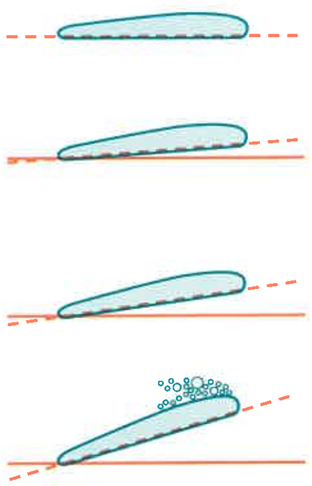

No slip
No slip can only occur when the propeller is windmilling (boat is coasting to a slower speed or being towed).

Too little slip
Too much diameter for the engine. A wasteful amount of power is used up in blade friction rather than in producing thrust.

Slip is correct
Most efficient use of power at the propeller shaft.

Too much slip
Occurs when the propeller diameter is too small for the power and load. It can also occur when there is too much cavitation or ventilation. This has the effect of reducing the blade area in contact with the water, thus creating a propeller that in effect is too small for the power load. In excess this will cause the negative pressure side to cavitate.

Figure 4-29

To create thrust there must be some angle of attack or slip. The objective of propeller design is to achieve the right amount of slip or angle of attack, which is around 4°, give or take a degree (Figure 4-30). This is accomplished by matching the right amount of blade diameter and blade area to the existing engine horsepower and propeller shaft RPM. Too much diameter and/or blade area will lower slip but will also lower propeller efficiency, resulting in reduced performance. Figure 4-29 illustrates this point.

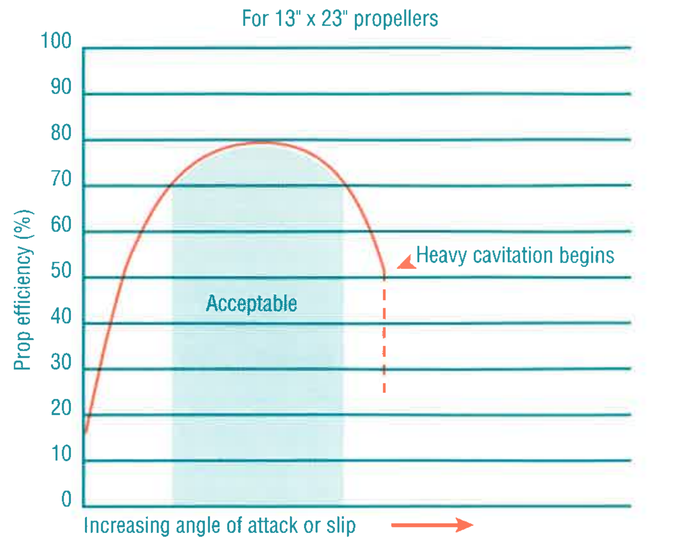

Figure 4-30
Propeller efficiency increases and then decreases as angle of attack is increased.

Calculating Rotational Speed, Blade Tip Speed, and Slip

The relationship of angle of attack and slip are shown when we consider rotational and forward speeds. Propeller engineers like to study propellers at the 7/10 radius (70% of the distance from the center of the propeller hub to the blade tip), which generally is the section of the propeller blade that is most typical of the whole blade. The 7/10 radius rotational speed (in MPH) can be calculated by the following equation:

$$\text{7/10 Radius Rotational Speed (MPH)} = \frac{\text{Propeller RPM x .7 Radius (in.)}}{168}$$

and can be shown by a vector (arrow) (Figure 4-31).

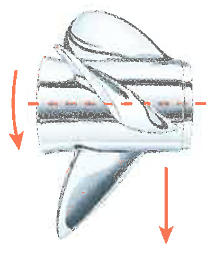

Figure 4-31 Rotational speed

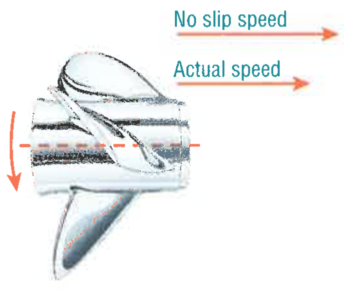

Figure 4-32 Forward speed

Blade tip speed can be calculated using the following equation:

$$\text{Rotational Tip Speed (MPH)} = \frac{\text{Propeller RPM x Diameter (in.)}}{336}$$

The forward speed can be shown by an arrow in the direction of travel (Figure 4-32). The length of the arrows again reflects the speed in MPH for both the measured forward speed and the theoretical (no slip) forward speed (see equation below). When the rotational speed and forward speeds are combined in a simple vector diagram, some interesting things appear (Figure 4-33).

Consider the following actual example:

A 16' boat powered by a 135 HP engine with 2:1 gear reduction turning 5400 RPM uses a 14" diameter by 19" pitch, cupped propeller to push the boat 43.5 MPH. What is the slip and angle of attack at the 7/10 radius?

As stated above, the propeller rotational speed equation is:

$$\text{7/10 Radius Rotational Speed (MPH)} = \frac{\text{Propeller RPM x .7 Radius (in.)}}{168}$$

The equation applied to the example boat:

$$\text{7/10 Radius Rotational Speed (MPH)} = \frac{\frac{\text{5400 (Engine RPM)}}{\text{2 (Gear Ratio 2:1)}} \text{ x } \frac{\text{13" (Prop Diameter) x .7}}{\text{2 (Convert to Radius)}}}{\text{168 (Constant for Unit Conversion)}}$$
$$= \frac{\text{2700 x 7 x .7}}{168} = \text{78.8 MPH}$$

Theoretical boat speed equation:

$$\text{Theoretical Boat Speed (MPH)} = \frac{\text{Prop Pitch (in.) x Prop RPM}}{1056}$$

The equation applied to the example boat:

$$\text{Theoretical Boat Speed (MPH)} = \frac{\text{19" + 1" (Pitch + Cup)} \text{ x } \frac{\text{5400 (Engine RPM)}}{\text{2 (Gear Ratio)}}}{\text{1056 (Constant for Unit Conversion)}} = \text{51.1 MPH}$$

Using some basic trigonometry, the angles and blade velocity come out as shown in Figure 4-33 and slip is calculated as follows:

$$\text{Slip (\%)} = 1 - \frac{\text{Actual Boat Speed (MPH) x 1056}}{\text{Prop RPM x Prop Pitch (in.)}} \text{ x } 100 = 1 - \frac{\text{43.5 x 1056}}{\text{2700 x 20}} \text{ x } 100 = 15\%$$

Easy-To-Use Propeller Slip Calculator Available

An easy alternative to the above slip calculations is to use the Quicksilver Propeller Slip Calculator (Figure 4-34). This special slide rule lets you quickly calculate propeller slip. (The other side of the slide rule is designed to calculate the performance of a given boat/engine combination when changing to higher- or lower-horsepower engines.)

To order, specify part number C-90-86147 and send a check or money order for $3 to: Quicksilver Prop Slip Calculator, P.O. Box 3900, Peoria, IL 61614.

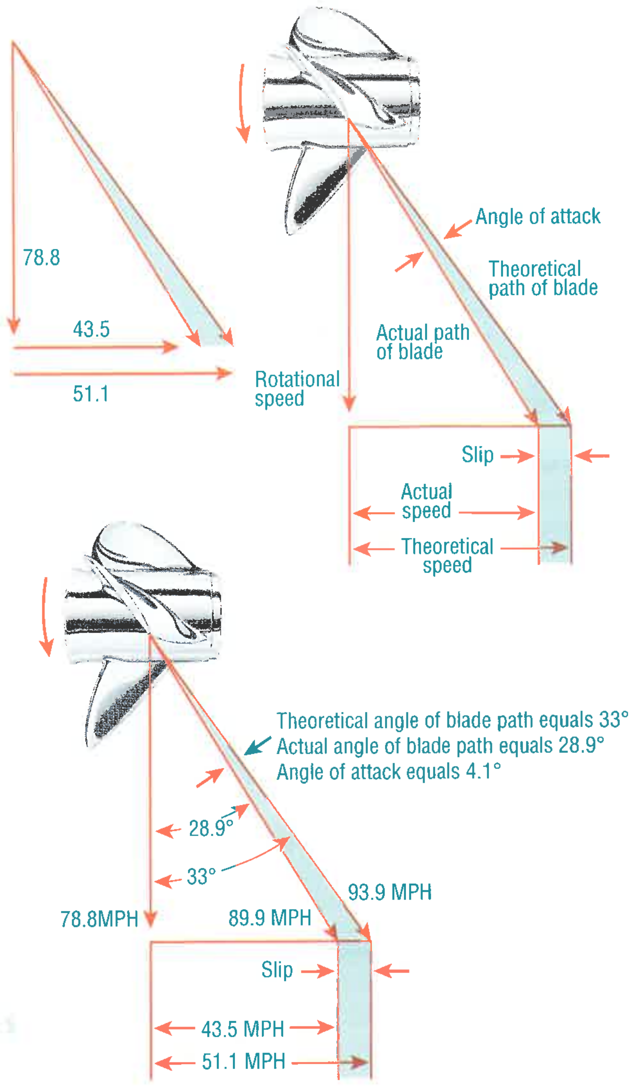

Figure 4-33
Combining rotational speed and forward speed

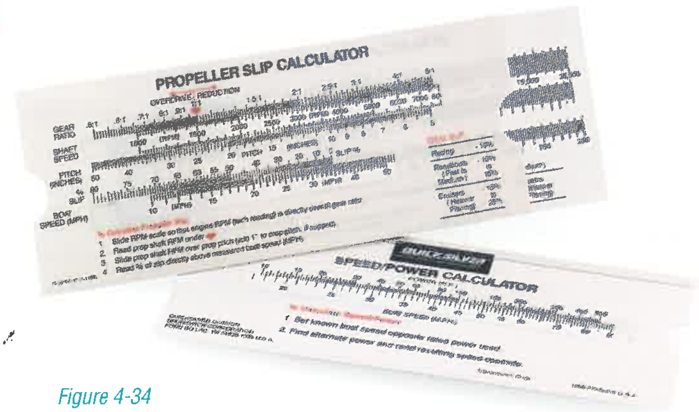

Figure 4-34
Quicksilver Propeller Slip Calculator

Efficiency

Calculating Efficiency

Although the average boater is not going to be able to calculate propeller efficiency, it is worth explaining to further ensure that propeller efficiency will not be confused with slip, a common misconception.

In simple terms, propeller efficiency is the power coming out of a propeller divided by the power going in:

$$\text{Prop Efficiency (\%)} = \frac{\text{Power Out}}{\text{Power In}} \times 100$$

Let's use horsepower (HP) for our units. First, to calculate horsepower *out*, the boat speed (MPH) must be measured (relatively easy). Second, the propeller thrust (lbs.) must be measured (very difficult).

$$\text{HP Out} = \frac{\text{Boat Speed (MPH)} \times \text{Prop Thrust (lbs.)}}{375}$$

To calculate horsepower *in*, the propeller shaft speed (RPM) must be calculated (easy):

$$\text{Propeller Shaft Speed (RPM)} = \frac{\text{Engine Speed (RPM)}}{\text{Gear Reduction}}$$

Then, the propeller shaft torque (ft. lbs.) must be measured (difficult). Horsepower *in*, then, is calculated:

$$\text{HP In} = \frac{\text{Propeller Shaft Speed (RPM)} \times \text{Propeller Shaft Torque (ft. lbs.)}}{5250}$$

Notice that although all the characteristics of a propeller—diameter, pitch, number of blades, rake, even slip—may affect efficiency indirectly, none appear in the efficiency calculation.

Example

Consider the boat in the previous example—a 16' boat powered by a 135 HP engine (2:1 gear reduction) which runs 43.5 MPH while the engine turns 5400 RPM.

With sophisticated instrumentation, the propeller shaft torque is measured to be 260 ft. lbs. and the propeller thrust at 43.5 MPH is found to be 880 lbs.

Now, armed with all of the necessary information, the calculations for horsepower *in*, horsepower *out*, and thus propeller efficiency, can be made:

$$\text{Propeller Shaft RPM} = \frac{\text{Engine RPM}}{\text{Gear Reduction}} = \frac{5400}{2} = 2700\ \text{RPM}$$

$$\text{HP } \textit{Out} = \frac{43.5 \times 880}{375} = 102.1\ \text{HP}$$

$$\text{HP } \textit{In} = \frac{2700 \times 260}{5250} = 133.7\ \text{HP*}$$

*Engine manufacturers are now rating all or some of their models by horsepower available at the propeller shaft, referred to as propeller shaft horsepower. Engines manufactured by Mercury Marine are rated by this method.

$$\text{Propeller Efficiency} = \frac{102.1}{133.7} \times 100 = 76.4\%$$

Efficiency and Angle of Attack

The graph in Figure 4-30 (page 13) shows how propeller efficiency increases and then decreases as angle of attack is increased. In the example in Figure 4-30, efficiency peaks at approximately 80% (3°- 4° angle of attack) and begins to decline as the angle of attack increases beyond the optimum.

Efficiency and Pitch/Diameter

In a given propeller series, the maximum possible efficiency decreases as pitch decreases. For example, a 23" pitch propeller with 13-1/2" diameter can have a peak efficiency of 80%, but a 13" pitch propeller with a 16" diameter can have a peak efficiency of only 65%.

If all other variables remain unchanged, propeller efficiency increases as the pitch/diameter ratio increases.

CHAPTER 5

Propeller Design and Manufacturing

Propeller Design

Marine propulsion borrows facts and theories from the field of aeronautics, as aerodynamics and hydrodynamics have much in common. Formal educational curricula have been developed for training in the field of aeronautics and, to some extent, in the field of big ship hydrodynamics. However, it has been left to the engine manufacturers to develop the art of recreational boating marine propeller design to the level of the sophisticated, computerized methods used today when dealing with comparatively small recreational planing boats.

Figure 5-1
Computer-aided design (CAD)

Figure 5-2
Computer-aided machining (CAM)

Mercury Marine has, in recent years, devised methods for designing all facets of its propellers on the computer. This contrasts with propeller design of the past, when prototypes were made totally by hand—filing, grinding, and buffing pieces of metal, in the laborious and time-consuming trial-and-error method of achieving desired performance. While trial and error still, and probably always will, play a role in propeller design and performance prediction, computerization has reduced its role in many aspects of design (Figures 5-1 and 5-2).

The use of computer-aided design and computer-aided machining (CAD/CAM) to enhance both the consistency and repeatability of propeller tooling is standard practice at Mercury. CAD allows the designer to try out new blade and hub shapes on the video display screen, and compare them to successful previous designs stored in the computer memory. Rapid prototyping brings the advantages of desktop design to the manufacturing process here. Stereolithography (SLA) is a computerized laser process whereby a plastic propeller prototype/model is made. Selective laser sintering (SLS) produces a wax model which can then be used to produce an investment casting. Since Mercury has its own in-house investment casting foundry, a propeller can be made from that wax in a very short time. This ability to create prototypes quickly allows much greater testing opportunities since prototype construction time is not a major consideration.

Despite the use of the latest technology and computer-assisted processes, propeller design is still as much an art as a science, dependent upon the experience and ingenuity of the propeller engineer.

Figure 5-3
Molten aluminum

Figure 5-4
Aluminum die casting

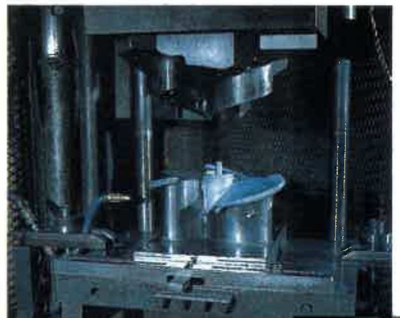

Figure 5-5
Trimming flash from aluminum propellers

Figure 5-6
Shot blasting, before and after grinding for surface finish

Figure 5-7
Grinding of aluminum propeller

Figure 5-8
Swagging diffuser ring onto propeller

Materials

Propellers are constructed of aluminum, stainless steel, plastic, composite material (plastic with a reinforcing material), and in limited applications, bronze. Each has properties which dictate application with certain types of propellers.

Aluminum

Aluminum is by far the most popular propeller material used today for recreational boat propellers. Aluminum is relatively low in cost, has good strength, good corrosion resistance, and is easily repaired. However, in comparison to stainless steel propellers, aluminum propellers are more easily nicked or bent.

Stainless Steel

Stainless steel is the strongest, most durable of all materials used for propellers—five times stronger than aluminum. This is its greatest advantage. The strength of stainless steel propellers will help maintain engine performance because these propellers are more resistant to the typical accumulation of small nicks and bends normally found on aluminum propellers, often after running for a short period of time. Blades cast of stainless steel can trade in some of that strength advantage and can be made thinner for better efficiency. Stainless steel is much more resistant to corrosion. Stainless steel propellers can be repaired easily, although more expensively than aluminum. They can cause some corrosion on nearby aluminum surfaces in salt water if good anodic protection is not used.

Plastic

Plastic and composite materials, because they cannot be repaired if they suffer impact damage—they simply break or chip away—and because they flex considerably more when subjected to high loads, are most appropriate for use on electric fishing motors and low-horsepower outboard engines. Plastic is completely galvanically inert and therefore is corrosion free. Nor will it cause corrosion on nearby aluminum surfaces.

Bronze

Bronze propellers are currently found only on tournament ski boats or very large inboard-powered yachts (stern drives and outboards use aluminum or stainless steel). They are the current standard for that application. Stainless steel propellers for tournament ski boats are starting to become more common and are considered to be the future propeller for this type of boat. They are stronger and more corrosion resistant than bronze. Bronze propellers can cause considerable corrosion on nearby aluminum surfaces in salt water.

Quicksilver Propeller Manufacturing

Die Casting of Aluminum Propellers

Most Quicksilver aluminum propellers are die cast. This method permits more sophisticated, precision design, more uniform blade configuration, and a smoother finish than sand casting. In this process a steel, two-piece die containing a cavity of the shape of the propeller desired is used to mold propellers.

The die is made of heat-treated steel from a precision single-blade master model so that each blade cavity in the die is precisely alike. In the casting and machining process (Figures 5-3 through 5-8) every precaution is taken to eliminate the possibility of cracks, blowholes, or unwanted porosity within the metal and to achieve good quality blade edges and blade surfaces.

To finish Quicksilver aluminum propellers, each one is chemically cleaned for better paint adhesion, then sealed with electro-deposition paint (EDP), a Quicksilver exclusive (Figures 5-9 and 5-10). Finally, shock-absorbing Flo-Torq rubber hubs are pressed in and the propellers are packaged for shipment around the world.

Stainless Steel Propellers and Investment Casting

The investment casting method or "lost wax" process, though centuries old, was first used by Mercury Marine for manufacturing propellers and made using stainless steel feasible as a moderately high-volume propeller material. The investment casting method is the most expensive, labor-intensive method of propeller manufacturing. It is used for all stainless steel propellers manufactured by Mercury Marine.

In this process, special wax is pressure-injected into a polished propeller die, ensuring high-dimensional accuracy in every detail (Figure 5-11). The warm, delicate wax replica of the propeller is taken from the water-cooled mold and allowed to cool in a temperature- and humidity-controlled room to maintain dimensional stability.

Next, a pouring cup is attached to the wax impressions which are then carried by a computer-controlled robotic arm and dipped into a ceramic slurry (Figure 5-12). This process is repeated several times until the ceramic mold (shell) is built up to the proper thickness.

After drying, the ceramic shells are heated in an autoclave. The wax impression melts out. The ceramic shell is heated to 1600°F in a burn-out furnace and brought up to pouring temperature (Figure 5-13). Meanwhile, the stainless steel is heated to 3000°F in preparation for the pouring process. Quicksilver stainless steel is an exclusive aerospace alloy with a strength far superior to standard marine-grade stainless steel.

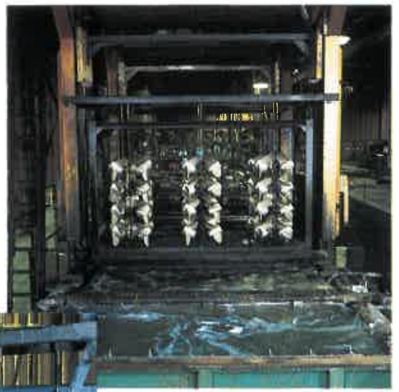

Figure 5-9
Aluminum propeller iriditing

Figure 5-10
Electro-deposition painting of aluminum propeller

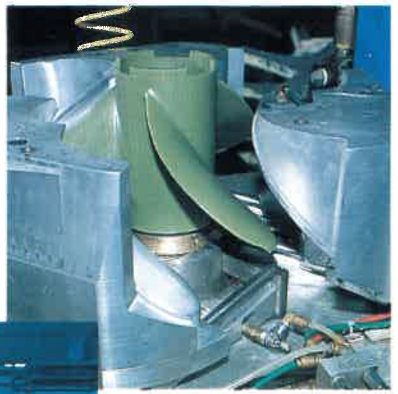

Figure 5-11
Propeller wax impression

Figure 5-12
Ceramic slurry

Figure 5-13
Preheating stainless steel propeller molds

Figure 6-4
Cleaver blade cross-section

Figure 6-5
Clear Machete/Black Machete propellers

Figure 6-6
Plastic propeller

wedge (Figure 6-4); that is, the leading edge is very thin and sharp, while the trailing edge is the thickest point on a pitch line. This style is best suited for elevated engine installations which allow the propeller blades to break the water surface (called surfacing).

Quicksilver Propeller Selection

Quicksilver propellers are designed exclusively for Mercury, Mariner, and Force outboards, and MerCruiser stern drives and inboards. Each one is carefully designed, precision engineered, and quality crafted—by engineers from the same engineering department that designed your engine. With this close relationship, they can achieve top performance with a particular engine or engine group. Quicksilver (Mercury) makes a wider variety of propellers designed specifically for its engines than anybody else in the world (more than 400 different and distinct Quicksilver propellers). So, the Quicksilver line offers the propellers you need, no matter what your specific boating activities.

General application guidelines are provided in the following Quicksilver propeller descriptions. For specific application to Mercury, Mariner, and Force outboards or MerCruiser stern drives and inboards, refer to the propeller charts in the current Quicksilver Catalog or see your dealer.

Plastic

Clear Machete™/Black Machete™
The design of these propellers (Figure 6-5) makes them the most weedless electric outboard propellers available. They're designed specifically for electric trolling motors.

Gas Outboard
Quicksilver plastic propellers (Figure 6-6) are available for low-horsepower gasoline outboard engines. They are only about half the weight of aluminum, completely inert galvanically, corrosion free, and will not cause corrosion on nearby aluminum surfaces. They are resistant to greases, oil, fuels, and battery acid. The color is solid throughout, so that color is retained despite abrasion, normal for any propeller used in silt, sand, or similar conditions.

Aluminum

Standard Aluminum
These propellers (Figure 6-7) are available in a large variety of pitches, diameters, and rakes for a wide range of outboard and stern drive applications. This is an excellent general purpose propeller. It is easy to maintain and repair. And it's economical, so it also makes a great second or spare propeller.

Large Diameter Aluminum
These offer enhanced mid-range performance, fuel economy, top-end performance, superior holding in turns, and positive reverse thrust for excellent stopping power and maneuverability on larger, slower boats using Bravo Two stern drives with greater gear reduction (Figure 6-8).

Large Blade Aluminum
This propeller line (distinguished by even-numbered pitch, 12", 14", and 16") (Figure 6-9) is designed for Alpha One stern drives and V-6 outboards. It offers high thrust for large workboats, pontoons, houseboats, or cruisers and good holding at planing speeds or at slower speeds in high seas.

High-Reverse Thrust
For workboats, large slower boats, and auxiliary sail power applications. They provide the same thrust levels in reverse as in forward gear. The Quicksilver high-reverse thrust propeller (Figure 6-10) employs a patented bi-directional design in which the blades are symmetrical front and rear.

Stainless Steel

QSS™
This propeller (Figure 6-11) is essentially a stainless steel propeller similar to the Quicksilver standard aluminum propeller with slightly thinner blades. Stainless steel gives it increased strength/durability over its aluminum counterpart for a wide variety of medium- to high-horsepower boating applications.

This is a cost-efficient alternative to aluminum, particularly in recreational boats that travel at higher speeds and can make use of higher engine trim angles. It is also good for use in salt water because of its resistance to corrosion.

Many boaters automatically associate stainless steel propellers with greater speed. However, stainless steel in and of itself does not make the propeller any faster. Some other features must also change, such as thinner blades, superior cup, progressive pitch, sharper leading edges. To take full advantage of all of these feature changes, you may need to experiment with elevating your engine height (for outboards). However, in most cases, a little added trim-out of the engine or stern drive will be possible and will result in some added speed by lifting the bow of the boat a little more, which results in higher hull efficiency.

Figure 6-7
Standard aluminum propeller

Figure 6-8
Large diameter aluminum propeller

Figure 6-9
Large blade aluminum propeller

Figure 6-10
High-reverse thrust aluminum propeller

Figure 6-11
QSS stainless steel propeller

Figure 6-12
Laser II stainless steel propeller

Figure 6-13
Mirage stainless steel propeller

Figure 6-14
HighFive stainless steel propellers, small hub (above), large hub (right)

Quicksilver High-Performance Propellers

Laser™ II

The Laser II (Figure 6-12) propeller family was developed specifically for use on bass boats and high-performance stern drives requiring a balance of top speed, acceleration, holding, and durability. It delivers excellent bow lift for better top speed and holding in turns, exceptional acceleration, and optimum boat operation with increased trim. Its thinner blades minimize drag but retain leading-edge thickness for impact resistance. "Acceleration slots" control ventilation to provide exceptional acceleration performance.

The Laser II has the highly polished Dura Tec finish and has a cast-in logo on the hub.

The Laser II fits Mercury and Mariner outboards 75 HP and larger and MerCruiser Alpha One stern drives.

Mirage®

The Mirage (Figure 6-13) family of propellers was designed to absorb the large power input of a large V-8 engine (454 cu. in.). The Mirage has a large diameter and high rake, which make it ideal for large boat/powerful engine combinations or other situations where aggressive holding is required. This propeller can operate effectively at higher than normal "X" dimensions (1"- 3" elevated installation)(see page 39).

The Mirage provides increased top-end performance, superior holding ability, much better acceleration, and mid-range fuel economy for performance MerCruiser stern drives, Mercury, and Mariner 135 HP outboard models and higher, except Mercury 150 XR6 and Mariner 150 Magnum III. The Mirage is the propeller of choice for the 250/275 HP (3.4L) V6s; it is the only type recommended by Mercury for use on these engines.

Like the Laser II, the Mirage has the highly polished Dura Tec finish and a logo cast in the hub.

HighFive™

Designed with high-performance bass boats and ski boats in mind, the HighFive (Figure 6-14) delivers unsurpassed hole shot, good top-end speed, better bow lift and handling, reduced vibration, and great holding in rough water. It replaces any Quicksilver propeller, pitch for pitch.

The HighFive receives the Dura Tec finishing process for improved fatigue life and the attractive, high-polished appearance. Some have acceleration slots to control ventilation, providing even greater acceleration performance.

These propellers run best when at transom heights from 1" to 3" above that normally used for the QSS line. Application is for 75-200 HP Mercury and Mariner outboards and select MerCruiser Alpha One and Bravo One stern drives.

Power^{2}™ Variable Pitch Propeller

The Power^{2} family (Figures 6-15A and B), the newest in the Quicksilver line, are two-pitch propellers designed to operate in a low-pitch position for low speed and greatly improved acceleration, then automatically shift to a 6" higher, high-pitch position for good top-end speed (Figure 6-16). This breakthrough in propeller technology gives boaters with engines manufactured by Mercury Marine the benefits of automatic transmission similar to that experienced in a car.

The dramatic increase in acceleration offered by Power^{2} is a great advantage for pulling up a water skier or skiers or planing a very heavy load quickly, such as a fully loaded family cruiser. The low-pitch mode also offers significant benefits for trolling, docking, and more precise maneuvering. At idle speeds, the propeller will always be in low pitch, perfect for trolling.

The shifting sensation is much the same as that experienced in an automobile because of the precision shifting action of the Power^{2}. Importantly, this is done without complicating the outboard gearcase or stern drive in any way. The result is an exciting personality change in the performance of most boats.

Power^{2} propellers have three blades and feature through-hub exhaust. They are investment cast from an exclusive stainless steel alloy. All shifting mechanism parts are stainless steel with the exception of bushings, which are of a corrosion-resistant composite.

Initially, Power^{2} will be available in six pitch ranges, from 11"-17" to 21"-27". Pitch selection is based on the high pitch. If you normally would use a 19" fixed-blade propeller, you would purchase the 13"-19" Power^{2}.

The only time you know you have a shifting propeller on is when it shifts. And it does so completely automatically. The propeller shifts 6" in pitch when the engine reaches the optimum RPM (Figure 6-16). The RPM at which the blades will shift can easily be set based on shift points recommended by Mercury Marine for optimum performance. Pitch combinations can be changed easily by simply changing the weight arms.

The new Quicksilver Power^{2} will fit all MerCruiser Alpha One stern drives.

Figure 6-15A (left)
Rotary cam controls the shift tension and thereby the shift point.

Figure 6-15B (below)
A: Weight arms
B: Prop nut and torsional spring

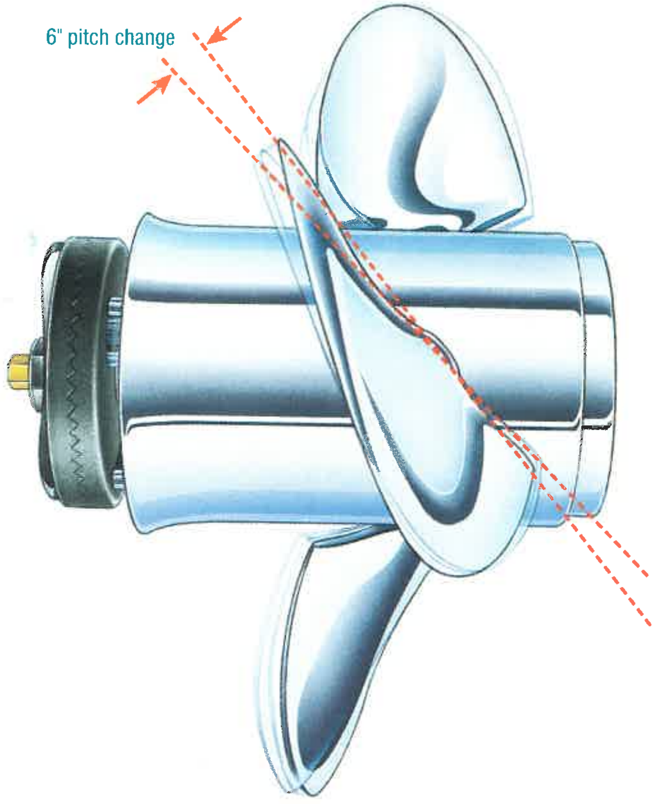

Figure 6-16
The Power^{2} shifts 6" in pitch.

Cleaver™
The Cleaver (Figure 6-17) is the best choice for performance boats that need very little, if any, bow lift from the propeller and are designed to run at speeds over 70 MPH. This is a true high-rev racing performer for surface-piercing stern drive and outboard applications. The Cleaver provides less bow lift while the Chopper™ (see below) provides more bow lift.

The cleaver-style of blade is specifically designed to operate in ventilating, surface-piercing applications. To install one on a boat not capable of this high speed range, or to bury the propeller under water, as in a standard installation, could noticeably reduce performance, RPM, and boat speed. Cleavers may come in solid-hub propellers usually for pure racing applications or in non-Jet-Prop exhaust designs commonly used in applications with gear shifting.


Figure 6-17
Sport Cleaver propeller

Chopper™
The Chopper (Figure 6-18) is for speed-minded sport-boaters and is designed to run at higher that 50 MPH. The design includes very high progressive rake which can develop considerable bow lift. This propeller permits higher engine mounting on the transom for more speed. These are non-through-hub exhaust propellers, so exhaust gases pass over the blades instead of through the propeller hub. This frees the engine to "wind up" quickly during planing and, in some cases, improves acceleration though generally results in slightly slower planing off.

The most remarkable aspect of the Chopper is the tenacious way in which it refuses to break loose when on plane, a much desired characteristic. In addition, weed-chopping fingers, which project forward from each blade, combined with the extreme blade sweep back (skew), provide a propeller that tends to cut up and throw off weeds, even in heavily weeded areas.

This is a high-performance propeller with thinner blade edges needed for superior surfacing operation. Therefore, it is not as resistant to damage caused by underwater obstacles as the more rugged types of Quicksilver stainless steel propellers.

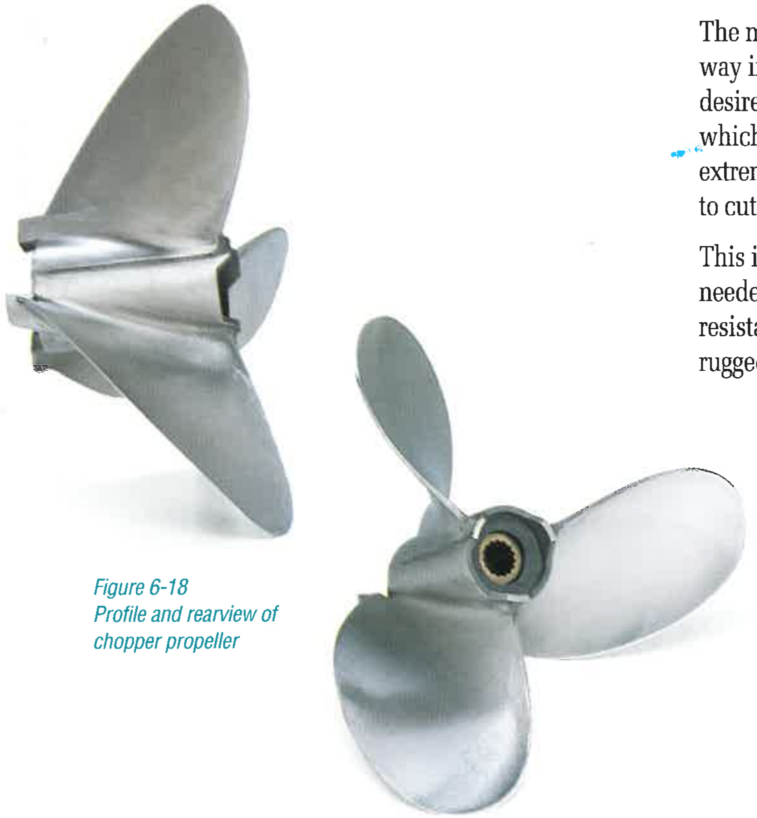
Figure 6-18
Profile and rearview of chopper propeller

Mercury Hi-Performance/Racing Propellers

Mercury builds Hi-Performance/Racing propellers for engines from 25 HP to 1000 HP.

This category includes only cleaver-type propellers which are of higher pitch ranges than those previously described. They are distinct from the Quicksilver line of high-performance propellers, which includes the Cleaver, Chopper, Laser II, Mirage, HighFive, and Power^2. The higher pitch range is required because of the combination of high-horsepower engines on lightweight boats. These propellers have a flat rake with rake angles of 15° to 20°, as opposed to the curved or parabolic rake of the Quicksilver high-performance propellers. (See Rake, page 7.)

They are used for performance and racing applications on Mercury and Mariner outboards and MerCruiser stern drives. Some can be used for both applications (Figure 6-17), while some are purely for racing (Figure 6-19). These propellers all have a satin finish.


Figure 6-19
Mercury Hi-Performance/Racing propellers

In distinguishing the use of this group of propellers from the Quicksilver high-performance propellers, a 90 MPH speed capability is generally used. Generally, below 90 MPH, the Quicksilver line would be applicable; above, one of the Mercury Hi-Performance/Racing propellers should be used. The Mercury Hi-Performance group of propellers includes the Kiekhaefer propellers by Quicksilver (Figure 6-20) for stern drives, which are for racing and select recreational applications. They are built specifically for the Super Speedmaster (SSM) drive. Satin finish is standard on Kiekhaefer propellers; the hand-worked, high-polished finish is optional.

"Blueprinting" is a term for customizing propellers to specific requirements for individual racing classes. Blade thickness, pitch, cup, and diameter are all adjusted to exactly match requirements for the racing class, based on the horsepower, weight, and design of the boat. The prop then receives a high degree of balance. Racing customers can contact Mercury Hi-Performance directly at 414-921-5330 for blueprinting services.


Figure 6-20
Kiekhaefer Hi-Performance propellers

CHAPTER 7

How to Select a Propeller

Figure 7-1
Seized pistons

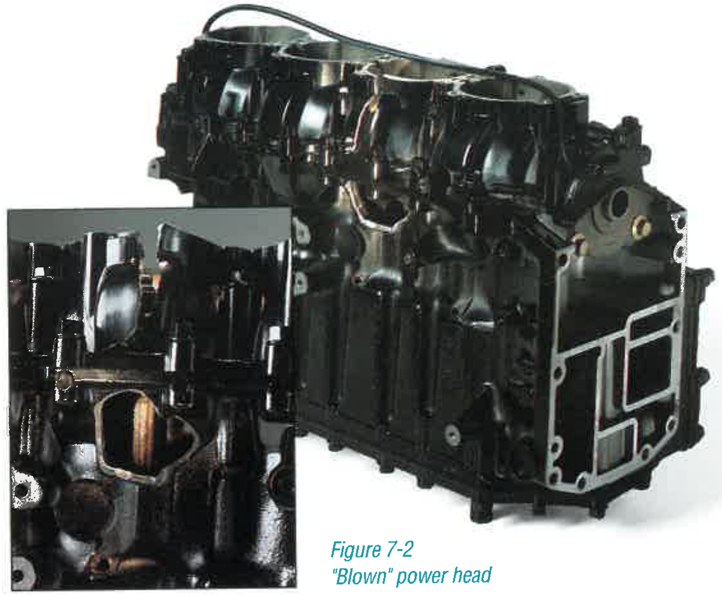

Figure 7-2
"Blown" power head

Best all-around performance is achieved when wide-open-throttle (WOT) engine operation occurs near the top of (but within) the wide-open-throttle RPM operating range designated by the manufacturer for that specific engine. Improperly propping an engine can not only reduce performance, but, in fact, damage the engine.

An engine that does not reach the rated RPM at wide-open-throttle is in an "over-propped" condition, resulting in "lugging." This high-torque operation puts a tremendous load on the pistons, crankshaft, and bearings. The engine runs much hotter and may overheat from having over-advanced spark timing for the reduced amount of fuel entering the engine. The mechanical strain on an over-propped marine engine is like starting an automobile in third gear from a dead stop at the bottom of a hill. This severe strain can lead to detonation, piston seizure, and engine damage (Figures 7-1 and 7-2).

On the other hand, an engine that revs past the recommended RPM will have higher than normal wear and can also be damaged by fatigued parts breaking and passing through the engine.

This is why it is so critical to be sure your engine is propped correctly for your boat/engine combination and the type of boating you want to do. To make this selection, propeller charts are published as guidelines for general applications of Quicksilver propellers. They are not intended, however, to be an absolute recommendation, as boats and operating conditions vary. Use the guidelines suggested here, but remember, the best propeller for your boating needs can be determined only by experimentation.

You really should have more than one propeller. If you use your boat for more than one type of activity, such as cruising, fishing, and skiing, you may well need different propellers for the best performance in each type of activity. In any event, you should keep a spare propeller on board at all times, along with a wrench that will fit the propeller nut, pliers, a spare nut, and tab washer (Figure 7-3).

Figure 7-3
Quicksilver floating prop wrench

Mercury/Mariner 200
2.5 Litre
Wide Open Throttle RPM: 5000-5600
Right Hand Rotation: Standard
Recommended Transom Height:
Long Shaft: 20", Extra Long: 25"
Gear Reduction: 1.87:1
Thrust Hub: 13171

Diameter	Pitch	Material	Approx. Gross Boat Wgt. (Lbs.)	Approx. Boat Length	Approx. Speed Range (MPH)*	Propeller Part Number LH Rotation	Propeller Part Number RH Rotation	Propeller Name
13-1/2"	23"	S. Steel	1800-3300	17'-22'	52-59	48-16321A4	48-16320A4	
13-1/2"	23"	Alum.	1800-3300	17'-22'	52-59		48-78124A40	
13-1/4"	21"	S. Steel	2200-4000	18'-24'	49-56		48-815760A40	HighFive**
13-7/8"	21"	S. Steel	2200-4000	18'-24'	49-56	48-16545A41	48-16546A41	Laser II
14-3/4"	21"	S. Steel	2200-4000	18'-24'	47-54	48-13703A41	48-13702A41	Mirage***
13-3/4"	21"	S. Steel	2200-4000	18'-24'	47-54	48-16319A4	48-16318A4	
13-3/4"	21"	Alum.	2200-4000	18'-24'	47-54	48-16319A4	48-78122A40	
13-1/4"	19"	S. Steel	2600-4500	20'-26'	44-51		48-815758A40	HighFive**
14"	19"	S. Steel	2600-4500	20'-26'	44-51	48-16543A41	48-16544A41	Laser II
15-1/4"	19"	[illegible]	[illegible]	20'-26'	[illegible]	48-13701A41	[illegible]	Mirage***

Figure 7-4 Quicksilver propeller selection chart (partial chart shown)

How To Read A Propeller Selection Chart

Quicksilver propeller charts include a boat speed range that is directly related to gross weight and boat length. An example appears here in Figure 7-4. The interrelation of these factors has a marked effect on the speed and performance of boats that fall within any given category. Generally, gross weight is the major factor (total weight of the entire package—boat, motor, fuel, passengers, and miscellaneous equipment). When choosing a propeller, this should be the primary consideration.

Figure 7-5 shows an example weight calculation. In this example, the gross boat weight is 2941 lbs. for a 20-ft. boat. To find the proper propeller, refer to the Propeller Selection Chart in Figure 7-4 for the 200 HP engine and locate this gross weight in the chart. The chart indicates that this boat falls within the weight and length ranges for 23", 21", and 19" pitch propellers. If the passenger load were reduced to one person, or by about 500 lbs., it would eliminate selection of the 19" pitch propeller. Therefore, experimentation should begin with 23" and 21" propellers, either aluminum or stainless steel. The higher pitch may run slightly faster, but the lower pitch will definitely have better acceleration. But, 5600 RPM should not be exceeded with a light load at wide-open-throttle (WOT) and WOT RPM should never fall below 5000 RPM under any load conditions.

Propeller lines normally are designed so that the next size pitch will change engine RPM by 300 to 500. So, if the engine RPM falls too low on your first propeller selection, try a lower-pitched propeller to bring the RPM up. Higher-pitched propellers reduce the engine RPM.

Pitch Change Calculation

There is an easy calculation that can be used for determining how much pitch change may be required. Just follow these steps:

1. Check the specifications in your operator's manual for the recommended operating range at wide-open-throttle (WOT) for your engine. A tachometer is necessary to determine the WOT RPM. (See discussion on tachometer use, page 45.)
2. Run the boat/motor combination at WOT to determine the maximum RPM. Adjust engine trim angle for optimum performance.
3. If the WOT RPM is below the recommended RPM range of the engine, note the reading of the tachometer. Take that reading and subtract it from the top end of the operating range.

Example: Operating range = 5000-5600 RPM
Top end of operating range = 5600 RPM
Tachometer reading = 4800 RPM
Difference = 800 RPM

4. For every 1" of pitch change, the effect will be approximately 200 RPM. Knowing this, take the difference in the above example at 800 and divide it by 200. The result is 4. The next propeller to try will be 4" in pitch less than the propeller which was first used. You should now either have the right propeller or be only one size off.

Example	Lbs. Weight
Boat - 20 Ft. (6.1 m) Deep "V"	1520
Engine - 200 HP	395
Battery and Box	56
Fuel and Tank [12 Gal. (45.4 Liters)]	85
Controls	5
Passengers [4 @ 175 Lbs. (77.3 kg)]	700
Anchor(s), Chain and Line	20
Fire Extinguisher	5
Paddle, Boat Hook, Etc.	10
Radio	5
Depth Finder	5
Skis and Line	10
Miscellaneous Equipment	125
Lbs. Total	2941

Figure 7-5 Gross boat weight calculation

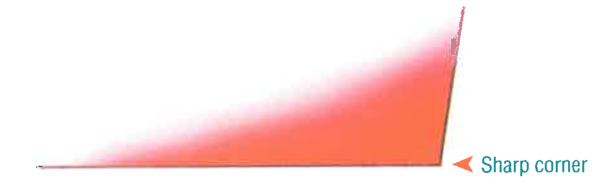

Figure 7-18
Flat bottom

Figure 7-19
"Hooked" bottom

Figure 7-20
"Rocker" bottom

Figure 7-21
Critical bottom area

Condition of the Boat Bottom

For maximum speed, a boat bottom should be as flat as possible in a fore-aft direction (longitudinally) for approximately the last five feet (1.5 m) (Figure 7-18). For best speed and minimum spray, the corner between the bottom and the transom should be sharp.

The bottom is referred to as having a "hook" if it is concave in the fore-and-aft direction (Figure 7-19). A hook causes more lift on the bottom near the transom and forces the bow to drop. This increases wetted surface and reduces boat speed, but it helps planing and reduces any porpoising (rhythmical bouncing) tendency. A slight hook is often built in by the manufacturer. A hook can also be caused by not trailering or storing the boat with support directly under the transom.

A "rocker" is the reverse of a hook (Figure 7-20). The bottom is convex or bulged in the fore-and-aft direction. It can cause the boat to porpoise.

Any hook, rocker, or surface roughness on the bottom, particularly in the all-important center-aft portion (critical bottom area) (Figure 7-21), will have a negative effect on speed, often costing several miles per hour on a fast boat.

Single- and Multiple-Engine Application

In single-engine installations, right-hand rotation propellers are almost always used. This is merely the result of tradition, but is perpetuated by nearly all recreational boat manufacturers placing their operator's position on the right-hand side to compensate for the boat roll resulting from a right-hand rotation propeller.

When a boat is equipped with dual engines, counter-rotating propellers are preferred (Figure 7-22). This balances any steering pull when the outboards or drives are trimmed evenly. Most experienced boaters prefer to rotate the propellers "out." That is, right-hand rotation on the right side, left-hand rotation on the left side, believing that overall handling is a little better. This can also afford more balanced steering when forced to operate with only one (off-center) engine. Many twin engine boats use propellers of the same rotation. The disadvantages are that steering torque is greater when trimmed well in or well out (assuming no power steering) and, in very rough water, if a hull goes airborne, a pair of right-hand propellers (for example) can walk the stern to the right a little.

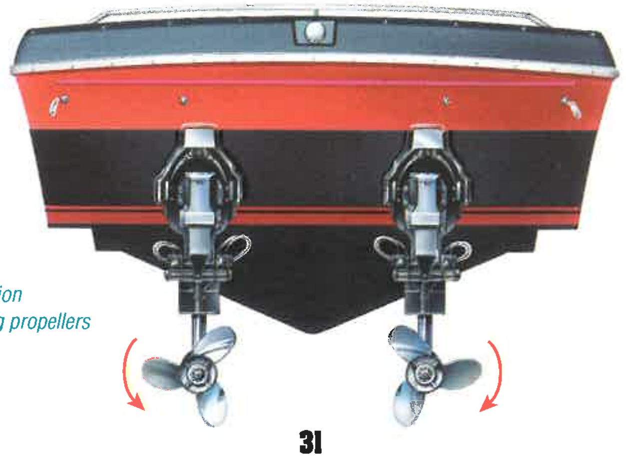

Figure 7-22
Dual engine installation
with counter-rotating propellers

Propeller Selection by Horsepower Range and Application

For Outboards up to 30 HP

Smaller engines are shipped with an aluminum propeller. Most are shipped with a propeller of moderate pitch and of a swept-back, weed-shedding blade shape. Each engine has at least one other propeller available of a different pitch for other boating applications, generally slower boat speeds/heavier loads, high-reverse thrust, higher speeds/light loads, etc.

All the normal propellers are rather "weedless," thick for durability, and of a flat pitch/rake design that is easy to repair. They are intended for submerged running; i.e., the propeller is intended to run with all its blades rotating well below the water's surface (versus propellers which run partially above the water line).

Several high-reverse thrust propellers are available for the engines from 4 to 25 HP. These propellers are not of the weed-shedding shape, but have rounded symmetrical blades and pitch distribution such that the propeller has the same performance characteristics operating in either direction. These propellers are designed for submerged operation on displacement-type, slow, heavy boats; i.e., sailboats, workboats, etc. For increased maneuvering, they provide about the same amount of thrust in forward and reverse. They are designed to cope with the exhaust gas discharge when in reverse. (Figures 7-23 through 7-25).

Figure 7-23
Sailpower engine, high-reverse thrust propeller

Figure 7-24
Inflatable boat with inflatable keel, rigid floor boards
and flexible material bottom.

Figure 7-25
Workboat

Figure 7-26
Tour boat

Figure 7-27
Midrange horsepower fishing boat

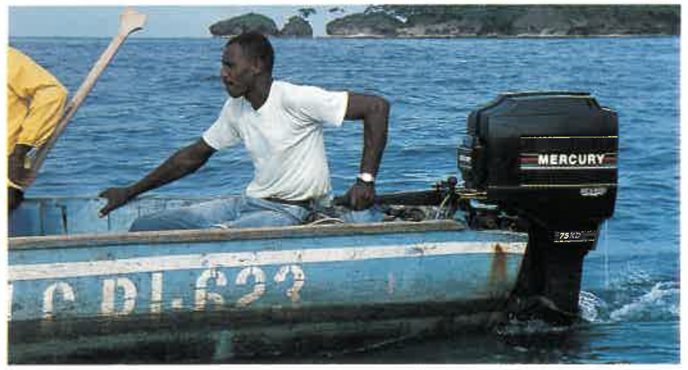

Figure 7-28
Fishing boat

Figure 7-29
Family ski boat

For 40-70 HP Outboards

The 40-70 HP engine family shares a common propeller group. The type of operation varies widely for this family. All types of boats, from barely moving houseboats to very light runabouts, must be covered (Figure 7-26).

The slower speed and displacement boats (Figure 7-25) will use the large diameter/large blade area lower pitches, i.e., 12-1/2" diameter x 8" pitch, 12-1/4" x 9", and 12" x 10-1/2".

Most common runabouts will use the higher-rake middle pitches of 12"-16" (Figure 7-27).

If extra durability is required (or desired), stainless steel (QSS) counterparts exist for all pitches from 12" to 16". These propellers may turn a little lower in RPM, but will generally hold better in turns because of their slightly higher cup.

The higher-pitch 17" and 19" aluminums are available for boats that are lighter and faster.

For 75-115 HP Outboards, Workboats, Barges, and Other Large Boats

These boats (Figure 7-28) use the very lowest-pitch aluminum propellers available, 11" and 13". These are large diameter/large blade area, thick, heavy duty props. There are stainless steel (QSS) counterparts in low pitches also—10" and 12" pitch—which are more durable.

Most suitable for heavy planing situations would be the 13" pitch or 15" pitch in aluminum and the 14" pitch or 16" pitch in stainless steel. In general, these propellers exhibit a little less diameter and an increase in rake over propellers of lower pitch. A heavy ski boat or boats operated at higher altitudes may also call for these lower-pitch general-purpose propellers. (Figure 7-29)

Recreational Boats

The 17"-21" pitch aluminum and the 16"-22" pitch stainless steel (QSS) are the most commonly used propellers. Generally, runabouts, family ski boats, fishing boats, etc., that may range in size from 15 to 19 ft. and weigh 1000-2500 lbs., will use these propellers with the specific pitch being determined by the boating activity, actual total boat weight, and horsepower installed. These propellers provide a wide range of performance.

Bass Boats and Lightweight Fishing Boats

These will need propellers with higher pitch and may need the higher rake of the Laser II propeller for holding and bow lift. Boats in the 45 MPH plus speed range and of 90 HP or more can generally use this extra bow lift to help reduce hydrodynamic boat drag.

The HighFive five-blade propellers are designed for a wide variety of engines and boats, from high-performance bass boats to cruisers. They offer better bow lift, acceleration (planing ability), and holding (especially in turns) than three- or four-blade counterparts, which can also result in improved top-end performance. (Figure 7-30)

High-Speed Boats

If the boat is very fast (60 MPH plus) and is capable of generating its own aerodynamic bow lift, the best propellers to use are Mercury Hi-Performance Cleavers. These propellers will not lift the bow so much and will provide better all-around balance at high speeds. Of course, it is understood that on such a fast boat the propellers will be run at a surfacing engine or stern drive height. (Figure 7-31)

For V-6 Outboards and MerCruiser Stern Drives

Two major factors that determine propeller application for these engines are submergence and function. Propellers operate fully submerged when their total diameter is below the water surface. They are partially submerged when some portion of their diameter is piercing the water surface (also referred to as "surfacing").

The amount of submergence is established by transom height or "X" dimension (stern drive). Generally, fully submerged propellers are considered the norm, providing good all-around performance at standard transom height or "X" dimension. Partially submerged propellers at raised transom heights or "X" dimensions are more specialized, tending to favor top speed over time-to-plane acceleration performance.

Work and Utility Boats, 27 Ft. Plus Cruisers

Outboard and Alpha One stern drive powered work and utility boats and 27 ft. plus cruisers whose propellers should be operating fully submerged will best be served by low odd-numbered pitches (11", 13" & 15") available in the standard aluminum propeller line. If more durability is desired, a QSS propeller of corresponding pitch can be used where available.

Single engine, Alpha One V-6 and small block V-8 powered stern drives and V-6 outboard powered large, heavy boats will benefit from using the large diameter/large blade area, low even-numbered pitch (12", 14" & 16") standard aluminum propellers. Acceleration, cruise performance, and reverse thrust are markedly improved with these propellers. (Figure 7-32)

Figure 7-30
Bass boat

Figure 7-31
High-speed, high-performance boat

Figure 7-32
Houseboat with large-diameter propeller

Figure 7-33
Offshore fishing boat

Figure 7-34
Offshore cruising boat

Figure 7-35
Sport boat

Smaller, Lighter, Faster Utility, Offshore Fishing, and Cruising Boats

The above recommendations also apply to these boats powered by V-6 outboards and Alpha One V-6 and small block V-8 models.

Big block V-8 Bravo One stern drives will perform best with Mirage propellers. These propellers can also be used on V-6 outboard-powered offshore fishing boats where propeller holding in large ocean swells is a requirement. However, acceleration performance will not be optimum.

Smaller, lighter, and faster stern drive- and V-6 outboard-powered utility and sport boats with standard "X" dimension/transom height can use mid-pitch (17"-21") standard aluminum propellers for good, all-around performance. Comparably pitched QSS stainless steel propellers offer additional durability, slightly better holding ability, and increased top speed due to thinner blade sections. The QSS propellers will also allow a modest increase in "X" dimension/transom height.

Laser II, HighFive, and Mirage propellers can be used to increase top speed further by more substantial increases in transom height/"X" dimension on V-6 outboard and big block V-8 Bravo One stern drive-powered boats, respectively. Alpha One V-6 and small block V-8 stern drive-powered boats will generally perform better with the smaller diameter Laser II and HighFive propellers.

The Laser II and HighFive propellers are also excellent ski propellers when operating fully submerged. For best results, pitch is generally reduced by 2" when running these propellers fully submerged. Also, acceleration performance of stern drive-powered boats using the lower pitched (19" and 21") Laser II propellers may be enhanced by installing ventilation slot plugs, defeating the ventilation feature, which allows the engine to rev higher rather than accelerate faster. (Figures 7-33 and 7-34)

Sport Boats

Bass boats and faster outboard- and stern drive-powered sport boats can use the higher pitches (23" plus) in all stainless steel propeller lines. Generally, the same comments as before apply. Boats in this speed range will tend to have transom heights/"X" dimensions such that their propellers are running surface piercing, necessitating the use of Laser II, Chopper, Cleaver, Mirage, and HighFive propellers where top speed is the predominant consideration.

Chopper propellers should be limited to light outboard-powered boats only. They will provide the ultimate top speed for boats requiring propeller-assisted bow lift at extreme transom heights. However, acceleration is frequently inferior to propellers which isolate exhaust gases from the propeller blades. (Figure 7-35)

High-Performance Applications

For high-performance applications for V-6 outboards and MerCruiser Alpha One/Bravo One stern drives, there are three different propeller lines to choose from: Laser II, HighFive, and Mirage.

Laser II and HighFive propellers are primarily designed for V-6 outboard and Alpha One and small block V-8 applications. With these applications, the Laser II is designed for top speed, while the HighFive is built more for acceleration and holding. As a result, the HighFive makes an ideal ski propeller.

The Mirage is primarily designed for big block V-8 Bravo One applications. The large diameter and blade area, when coupled with the higher horsepower, produces excellent acceleration and holding as well as superior top-end performance. Lower-pitched Mirage propellers can also provide enhanced performance for lower-horsepower stern drives.

Some of the lighter and faster outboard- and stern drive-powered boats requiring very high pitch (25" plus) may be of the tunnel-bottom type (Figure 7-36). This type of hull generates bow lift aerodynamically and does not require the propeller to assist in this function. Cleaver propellers, which provide very little bow lift, are most effective on this type of boat.

Propeller applications for outboard- and stern drive-powered boats that have speed capabilities above 90 MPH fall in the very high-performance or racing categories and go beyond the scope of consumer-oriented high-performance pleasure boating. If questions in this speed range arise, contact Mercury Hi-Performance directly at 414-921-5330.

Switching Among Propeller Types/Families

When switching from one type of propeller to another, the basic rule is that you begin by switching pitch for pitch. If you were changing from a Laser II 19" pitch to a HighFive, the HighFive should also be 19" pitch.

If you are changing from a fixed-pitch propeller to the Quicksilver Power^2, you would select the Power^2 with the high-pitch position corresponding to your current propeller; i.e., if you use a 19" pitch propeller now, you would select the 13"-19" Power^2.

If you are switching from a V-6 Laser II to a Mirage, you will want to drop 2" in pitch if you are running in the low end of the RPM range. Conversely, when going from a Mirage to a Laser II or HighFive, you may need to increase pitch.

Figure 7-36
Tunnel bottom

CHAPTER 8

Commonly Asked Questions About Boating Performance

What exactly is torque?

Torque is the twisting or rotating effort of any shaft, such as the drive shaft driven by an outboard engine. Torque is commonly expressed in pound-feet. Torque is directly proportional to the horsepower passing through and inversely proportional to the shaft speed (RPM).

In Figures 8-1 and 8-2, the engine delivers torque through its crankshaft to the drive shaft and finally to the propeller shaft. The transfer of torque, or twisting force, from the drive shaft to the propeller shaft is made through gears. The torque developed at the engine is thus delivered through shafts and gears to the propeller. However, there usually is a 5% to 10% loss of horsepower, and thus torque, by the time it reaches the propeller, due to the friction between moving parts.

The following equation shows the relationship of torque to horsepower and shaft speed (RPM):

$$\text{Torque (ft. lbs.)} = \frac{\text{Horsepower} \times 5250}{\text{RPM}}$$

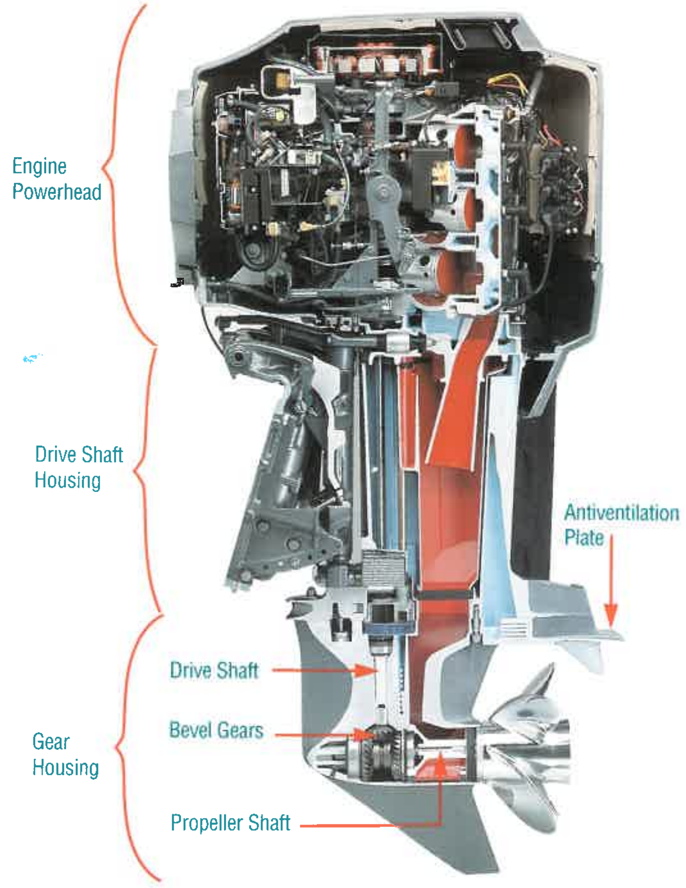

Figure 8-1
Outboard engine demonstrating torque path.

What does motor gearing have to do with torque?

When there is no gear reduction, as in Figure 8-3, 5000 engine RPM turns the propeller at 5000 RPM. Here, there is no change in torque. The propeller sees the same torque that is coming from the powerhead, but for frictional losses.

If gear reduction is used, however, as in Figure 8-4 where a two-to-one (2:1) gear reduction exists, the 5000 engine RPM is reduced to 2500 RPM at the propeller. Therefore, by cutting propeller shaft speed in half, the torque has been doubled.

As the higher torque is transmitted to the propeller shaft with gear reduction, a larger-diameter, higher-pitch propeller (Figure 8-4) is required. A slower-turning, larger-diameter, higher-pitch propeller is more efficient than a faster-turning, smaller-diameter, lower-pitch propeller. This usually means better acceleration as well as better top speed, up to the point where the higher drag of the larger, higher-reduction gearcase overtakes the propeller efficiency benefit. That is why at higher racing speeds a smaller, lower-drag gearcase with little if any gear reduction will run faster than a larger gearcase with much gear reduction, despite the greater propeller efficiency associated with the larger gearcase. Gearcase drag is proportional to the velocity squared ($D \approx V^2$).

The pitch acts like another set of gears with a given boat and load. When using a propeller from a propeller line designed for your engine, correct pitch is evident when, at wide-open-throttle, the engine runs within the manufacturer's specified RPM range.

The faster the boat moves, given a specific engine and gear ratio, the smaller the ideal propeller diameter will be. As shown in a propeller chart (page 28), the propeller diameter goes down as the pitch goes up (fully submerged propellers only).

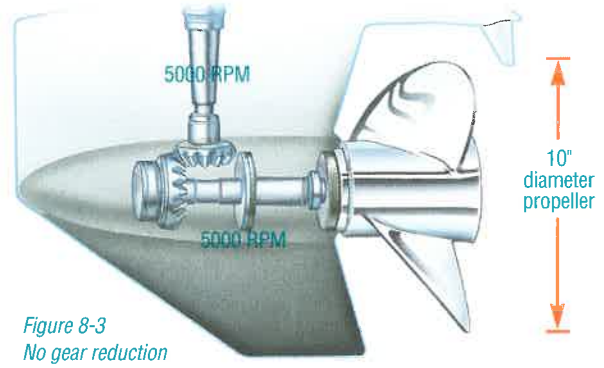

Figure 8-3
No gear reduction
Pinion gear has 13 teeth
Driven gear has 13 teeth

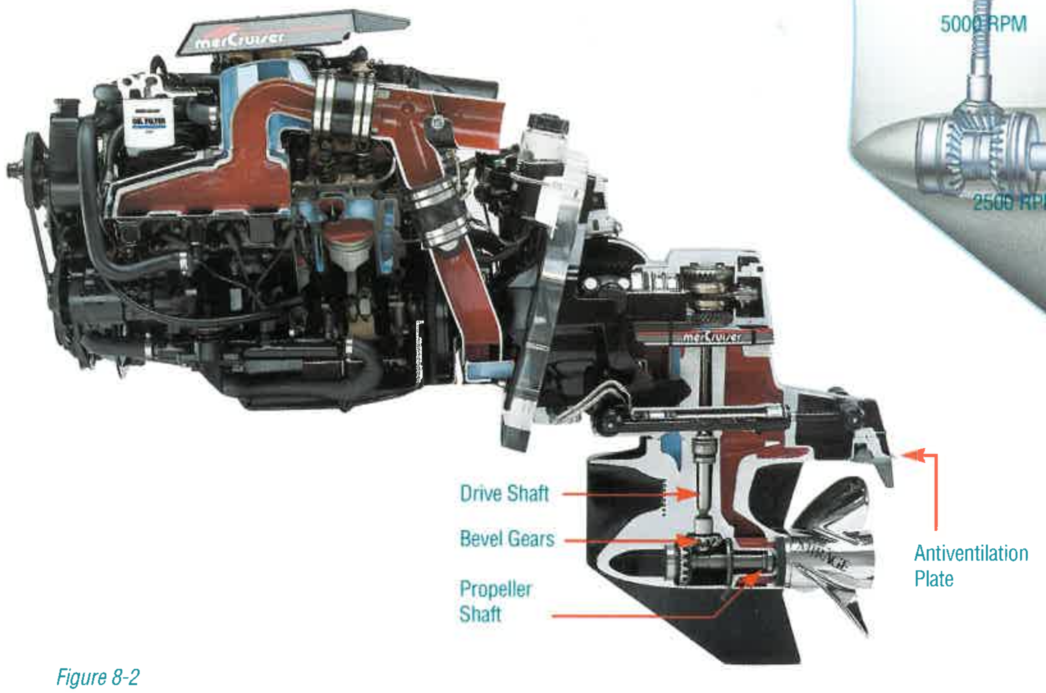

Figure 8-2
Stern drive engine demonstrating torque path.

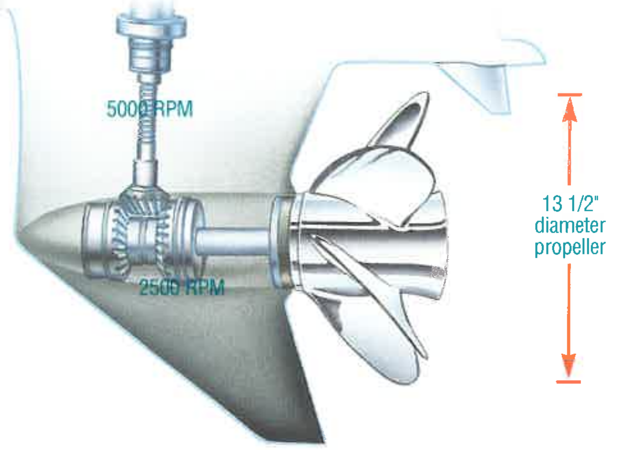

Figure 8-4
2:1 gear reduction
Pinion gear has 13 teeth
Driven gear has 26 teeth

How does propeller torque produce boat roll?

When observing from behind a boat, the propeller turns clockwise when underway with a normal right-hand propeller. As water resists the clockwise rotating propeller, it causes the boat to roll slightly in the opposite direction (counterclockwise) or down on the left (port) side and up on the right (starboard) side (Figure 8-5). To offset this slight imbalance, the driver's seat is placed on the starboard side (Figure 8-6). Boats differ significantly in the degree of their reaction to prop torque.

Figure 8-5
Driver on port side enhances boat roll (right-hand rotation propeller).

Figure 8-6
Driver on starboard side balances boat roll (right-hand rotation propeller).

What is the correct height to mount the engine on the transom?

For a propeller to best satisfy particular boating needs, the engine must be attached to the transom at the correct height. Over the past 30 years industry standards for transom height have been developed: 15" for "short shaft" engines, 20" for "long shaft" engines, and 25" for "extra-long shaft" engines.

Standard Mounting

A correct conventional installation would generally place the antiventilation plate on many engines about even with the boat bottom when the engine propeller shaft is parallel to the boat bottom (Figures 8-8 and 8-11).

Lower Mounting

Setting the engine lower (deeper in the water) (Figure 8-7) tends to:

1. cause excessive spray,
2. increase gearcase drag,
3. reduce underwater clearance, and
4. adversely affect handling of faster boats.

However, there are exceptions to the above. Many small fishing engines and some larger engines are designed to run with their antiventilation plate an inch or two below the boat bottom. This can assist in reducing or eliminating propeller ventilation.

Higher Mounting

In the past, the only negative effect from mounting an outboard or stern drive higher than standard was an increase in propeller ventilation, which could cause difficulty in planing, particularly with heavier loads. However, as available power has steadily increased, and with improvements in propeller design—particularly in the field of high-performance propellers—owners of faster boats have explored a new, higher range of performance that can be achieved by raising their engines above the old standard height. It is becoming more common to raise outboards three inches or more above the standard on fast-boat installations (Figures 8-9 and 8-10). Outboard manufacturers are now recommending that engines be mounted higher than the old standard, provided boat speed justifies it. In fact, a growing number of boat builders are building their faster outboard-powered boats with transoms 1" to 3" above the standard height (usually 20").

Boat builders of sport boats using stern drive propulsion are only slightly more conservative. Referring to the use of non-racing stern drives, the "X" dimension is raised on fast, conventional single-drive boats by 1" to 2" (Figure 8-12) and on other bottom styles (such as catamarans) by 2" to 3". Twin-drive installations will call for even less elevation.

However, by raising an engine or drive to excessive transom heights, the increased risk of engine overheating due to insufficient cooling water is a major concern. Manufacturers cannot be held responsible for, nor accept, any warranty obligations for overheating damage caused from this type of excessive setup and operation. Thus, the driver must accept the responsibility of constantly monitoring the engine cooling water pressure and/or temperature.

Some engines are equipped with overheat horns, but any engine can be rigged with a water pressure gauge. However, a water pressure gauge can give you a false sense of security from a temporary, high pressure reading, resulting from a steam pocket trapped at the top of the block. And the overheat horn doesn't give any feel for how close to overheating the engine is running. A water temperature gauge is the most reliable instrument for monitoring the operating temperature of your engine.

Top-of-the-block water temperature should not be allowed to exceed 140° (60°C) while water pressure at full throttle should not be allowed to fall below 70% of the full throttle reading taken at a more conventional transom height. Remember, as engine installation height is increased, your freedom to trim the engine out without overheating is reduced.

Raising the engine can provide several advantages:

1. Reduced lower unit drag, thus increased speed (approximately one MPH per inch in the 60-80 MPH range).
2. Improved handling on faster boats. Excessive rudder in the water at higher speeds on a light boat can increase handling problems and cause "chine walking" (left to right to left rocking motion).
3. Greater clearance to underwater obstacles.
4. When combined with trimming out (the usual case), reduction of steering torque to nothing, especially at around a 23" transom height for a long-shaft engine.
5. In a few cases, improved planing off, by allowing the propeller to take in surface air, thus considerably increasing engine RPM, which results in more available horsepower when it is needed.

Figure 8-11
Standard stern drive engine installation

Figure 8-12
Higher stern drive installation

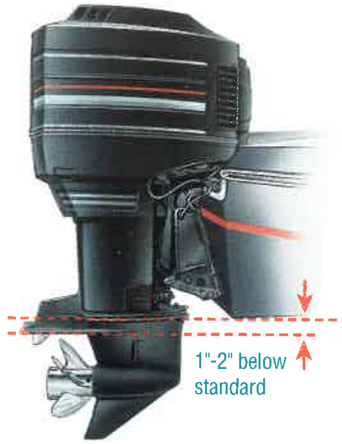

Figure 8-7
Work application:
heavily loaded, slow speed

Figure 8-8
Normal duty:
average speed installation

Figure 8-9
Sport application:
sport and ski

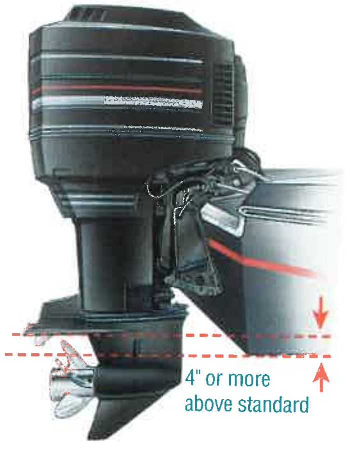

Figure 8-10
High-performance application:
maximum speed is primary consideration

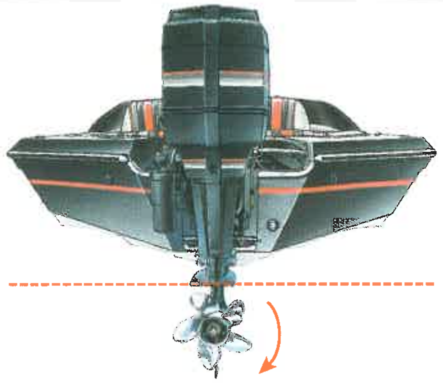

Figure 8-13
Standard installation with the antiventilation plate approximately flush with the boat bottom and the propeller blades below the water surface.

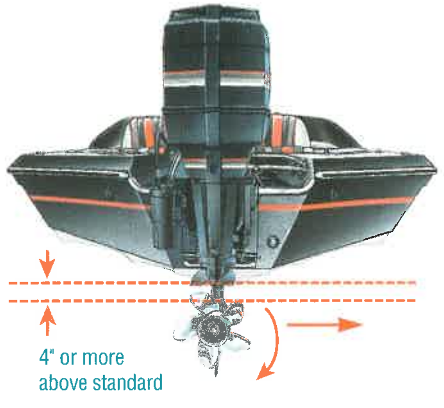

Figure 8-14
The same boat and engine as in Figure 8-13 but with the engine raised sufficiently on the transom to place the antiventilation plate well above the boat bottom. This locates the arc of the propeller above the water's surface. The arrow pointing to the right indicates the direction in which the stern of the engine (not the boat) will be pulled as the surfaced propeller tries to walk across the surface, very much like the simulated paddle wheel in Figure 8-15.

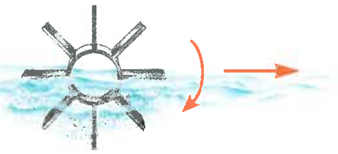

Figure 8-15
Paddle wheel

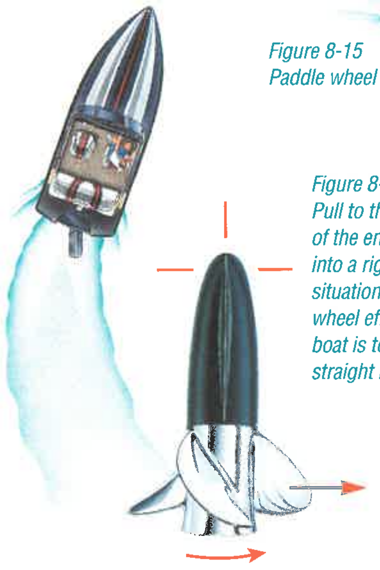

Figure 8-16
Pull to the right on the stern of the engine forces the boat into a right-hand turn. This situation requires steering wheel effort to the left if the boat is to be held in a straight line.

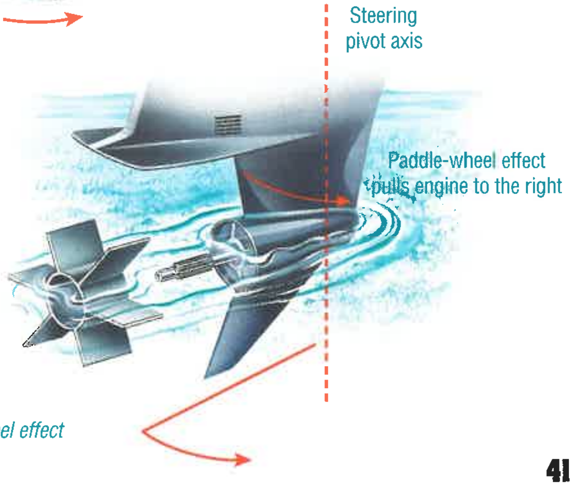

Figure 8-17
The paddle wheel effect

There are also some disadvantages to raising the engine above standard installation height (Figure 3-13):

1. As the engine is raised higher on the transom, the risk of overheating from lack of sufficient cooling water increases. Cooling water flow must be monitored more frequently (see previous page).
2. At higher transom heights the trim tab is no longer effective as a means of altering steering torque. Heavy steering torque may be encountered, and the driver must maintain a continuous firm grip on the wheel at all times when neither power steering nor no-feedback steering is employed (Figure 8-14).
3. Engine raising is not for heavier, slower boats.
4. A higher-rake, cupped, sharp-edged propeller is generally required.
5. In many cases planing off, particularly with a load, is more difficult.
6. There is a little more vibration, which may reduce riding comfort, and eventually may loosen parts on the engine and boat.
7. Dual-engine installations provide a new problem because, during turns, the outside engine is lifted higher out of the water than a single, centrally located engine. This usually means that with dual engines, they must be mounted an inch lower than a single engine on a boat of similar speed.
8. The transom must be sufficiently strong when mounting more than an inch above the original transom top. Your boat dealer or boat builder should be contacted.
9. As an outboard or stern drive is progressively raised, the propeller will eventually break the surface of the water. As this occurrence increases, a blade sweeping across the top, fanning through air, will not pull as hard in a sideways or propeller torque direction as the fully submerged blade sweeping across the bottom of the propeller arc. This will cause a right-hand rotation propeller to want to move or walk to the right much as a paddle wheel would try to do (Figure 8-15). This action in turn tries to pull the aft end of an outboard or stern drive to the right, thus causing the boat to want to go into a right-hand turn if not resisted at the steering wheel (Figure 8-16). This steering pull will either add to or subtract from the steering pull generated by the propeller shaft running trimmed in or trimmed out. When the propeller is elevated perhaps 5" or more above the standard height, the "paddle wheel" effect will completely dominate any other steering torque cause (Figure 8-17).

Centering The Engine

Generally, centering the engine within approximately 1/4" (6.4 mm) is desirable (Figure 8-18). As an engine (installed on a normal vee-bottom hull) is moved off center, it is increasingly lifted out of the water when the boat is turned in the opposite direction, thus increasing the likelihood of ventilation. Spray problems also may arise.

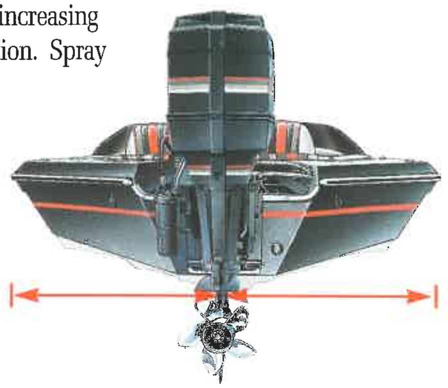

Figure 8-18
Centering the engine is desirable.

What is the "trim angle" of the engine?

Trim angle of an outboard or stern drive is the angle between the boat bottom and the propeller shaft formed by moving the engine/stern drive closer to the boat transom, called trimming "in" or "down" or "under," or moving the outboard/stern drive further away from the boat transom called trimming "out" or "up." When a boat is cruising on plane and the trim is adjusted so that the propeller shaft is parallel to the surface of the water, that is said to be running at "neutral" or "zero" trim. On outboards without power trim, this angle is adjusted by changing the hole in which the adjustable tilt pin is inserted. The term "trim" is generally used when referring to adjusting the outboard or stern drive within the first 20° range of travel. This is the range used while operating your boat on plane. The term "tilt" is generally used when referring to adjusting the outboard or stern drive further up out of the water.

The trim angle of the outboard/stern drive has a distinct effect on the planing angle of the boat which, in turn, significantly alters top speed and handling. The engine/drive should be trimmed in for best start-up acceleration and shortest time to plane. The engine/drive would then be trimmed out for peak performance. If trimmed "in" (under) too far (Figure 8-19), the bow drops and the boat runs too wet. In this condition, top speed drops, fuel economy decreases, the boat may oversteer in one direction or the other ("bow steering"), and steering torque will increase (to the right with a right-hand rotation propeller). Occasionally, extreme trim under can cause a boat to list to the left (with a right-hand propeller).

If trimmed "out" too far (Figure 8-20), the propeller may lose its hold on the water, fast vee-bottom boats may start to "walk" from right to left to right, etc. ("chine walking"), steering torque will increase in the opposite direction to that when trimmed in (Figure 8-19), and getting on plane may be difficult or labored. Porpoising of the boat may also occur.

Many newer outboards with power trim can only trim within the 20° range while underway above idle speed. All stern drives and older outboards with power trim have the capability of trimming all the way up, even when the boat is on plane. However, it is unwise to operate on plane when trimmed beyond the maximum trim position (into the tilt range), as the engine no longer receives side support from the clamp brackets. Severe damage could occur in a turn if the gear housing should strike a submerged object. Figure 8-21 shows proper trim position.

Figure 8-19
Engine or drive trimmed "in" (bow too low).

Figure 8-20
Engine or drive trimmed "out" (bow too high).

Figure 8-21
Engine or drive properly trimmed.

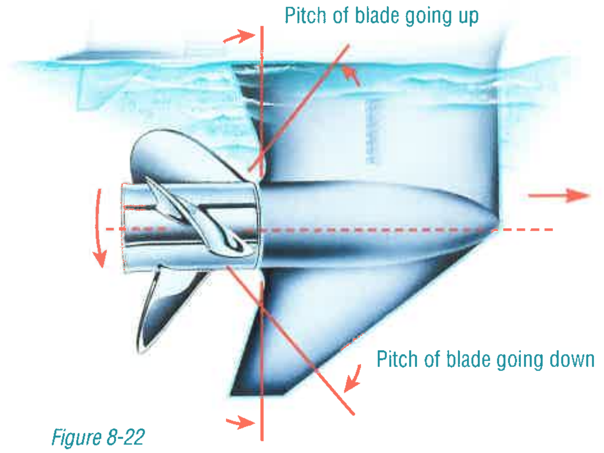

Figure 8-22
Trimmed parallel to water surface. Little or no steering load.

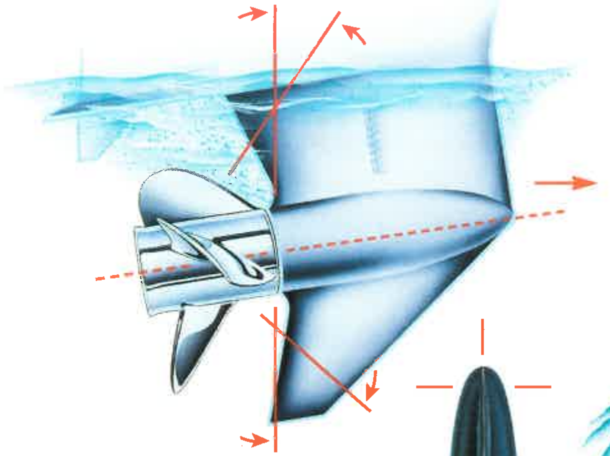

Figure 8-23
Trimmed-in position creates right/left imbalance of propeller, pulling the engine to the right.

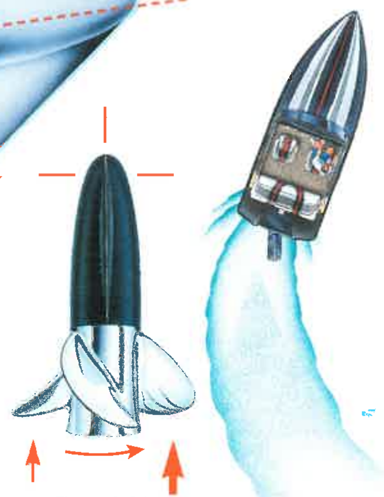

Figure 8-24

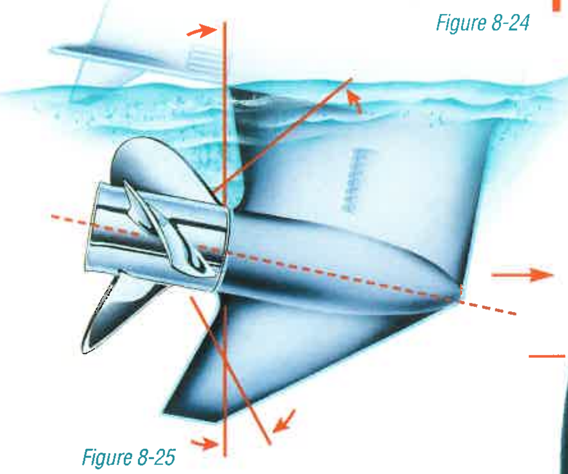

Figure 8-25
Trimmed-out position creates right-left imbalance of propeller, pulling the engine to the left.

Figure 8-26

How does trim angle affect steering torque?

When the propeller is run fully submerged and with the propeller shaft approximately horizontal (parallel to the surface of the water) as shown in Figure 8-22, there should be little, if any, steering load. Although this also applies to stern drives, there are other complications due to a stern drive's tilted steering axis, which can independently cause some steering torque.

However, with the engine or drive unit (right-hand rotation propeller) trimmed in (Figure 8-23), because of the propeller shaft tilt, the downward-moving blade on the right side of the propeller shaft has effectively more pitch, while the opposite is true of the upward-swinging blade on the left side (relative to the surface of the water). This right/left imbalance pulls the engine or drive unit to the right, and makes the boat want to go into a right-hand turn. Naturally, the driver must resist this force if the boat is to continue in a straight line.

Figure 8-24 shows the gear housing and propeller of the trimmed-in engine as viewed from the surface of the water. Note that the propeller blade on the right side produces more thrust than the blade on the left, as indicated by different-size arrows, and that the boat is actually being pulled into a right turn.

The entire situation reverses when the engine or drive unit is trimmed out well past horizontal (Figures 8-25 and 8-26).

To help counteract this steering imbalance, most outboards and all MerCruiser stern drives are equipped with an adjustable trim tab. Since the tab must be in one selected position, the driver must choose the engine trim position that he desires to balance (Figure 8-27).

In many boat and engine installations the engine or drive unit will be operated in a slightly trimmed-out position. This will cause the stern of the engine to move to the left, causing the boat to want to turn to the left. The trim tab, when properly adjusted, can steer the engine back in line, if, in this case, the trailing edge of the trim tab is moved to the left (Figure 8-27). For right-hand steering torque, the opposite is true.

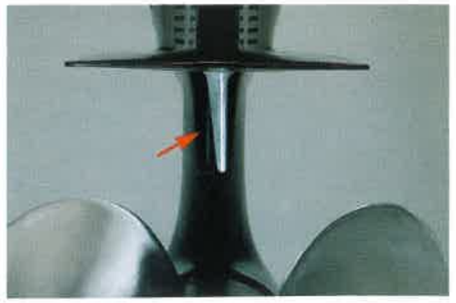

Figure 8-27 Adjustable trim tab can be set to help counteract steering imbalance when antiventilation plate is at or very little above boat bottom. Illustration shows trim tab trailing edge set to the right to help offset pull to the right as in Figure 8-23.

What is power trim?

Trimming can be controlled far more conveniently by power trim, which is standard on most MerCruiser stern drives, standard on larger outboard motors, and optional on others.

Power trim permits control of the angle of the propeller shaft relative to the boat bottom at the touch of a button (Figure 8-28). While on plane, the angle of the boat bottom to the water has much to do with maximum top speed, fuel economy, handling, and choppy-water ride.

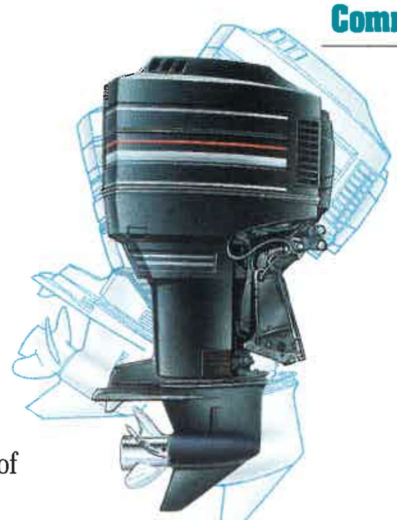

Figure 8-28
Power trim controls the angle of the drive relative to the transom at the touch of a button.

Boat bottoms have the least drag at an angle of from 3° to 5° with the water. If they run flatter than 3°, as most light planing boats tend to do, or steeper than 5°, as stern-heavy boats just barely on plane may do, efficiency suffers. Power trim can pay back dollars in fuel savings or give added thrills and safety with a faster, better-handling boat, or push a stern-heavy boat onto plane that otherwise might not make it.

Here's a useful tip on operating power trim when a boat runs aground. It generally is best to not try to power out in forward. Rather, with the engine or drive trimmed out sufficiently (Figure 8-20) to not dig into the bottom, but still give the propeller a fair bite, operate carefully in reverse. This works better because, in the trimmed-out position in reverse, there is some downward thrust that helps lift the stern of the boat a little and forces propeller wash under the boat. Operating in forward tends to push the stern down harder against the bottom.

What are hydraulic jack plates?

Hydraulic jack plates provide the ability to adjust the engine up and down while underway, as opposed to having a fixed transom height. They enable boaters to maximize acceleration, speed, and economy. They are used in combination with power trim.

The Quicksilver ParaLift™ hydraulic jack plate features the most progressive design in the industry. It delivers a full 12" vertical travel and 12" horizontal setback for outboards that weigh up to 500 lbs. Unlike conventional slide-motion brackets, the ParaLift features a parallelogram configuration (Figure 8-29). This means the engine is closer to the transom when it's raised for high-speed operation, then is farther away when lowered for a smoother ride in rough water.

Its unique pivoting movement allows the engine to be buried for a gripping hole shot and then elevated to reduce conventional lower unit hydrodynamic drag. It also allows slow-speed operation in shallow water in a more efficient manner than just using power trim. Shallow-water fishermen will appreciate this feature because it means with the ParaLift they can more easily get their boat on plane in shallow water and stay under power virtually anywhere the boat can float. The operator must monitor engine temperature and position of water pick-ups to assure sufficient flow of water to cool the engine. When the boat is moored, the ParaLift can raise a fully tilted engine well out of the water, above the reach of lapping saltwater. This extra elevation makes it easier to change a propeller, launch in shallow water, and offers greater road clearance for trailering.

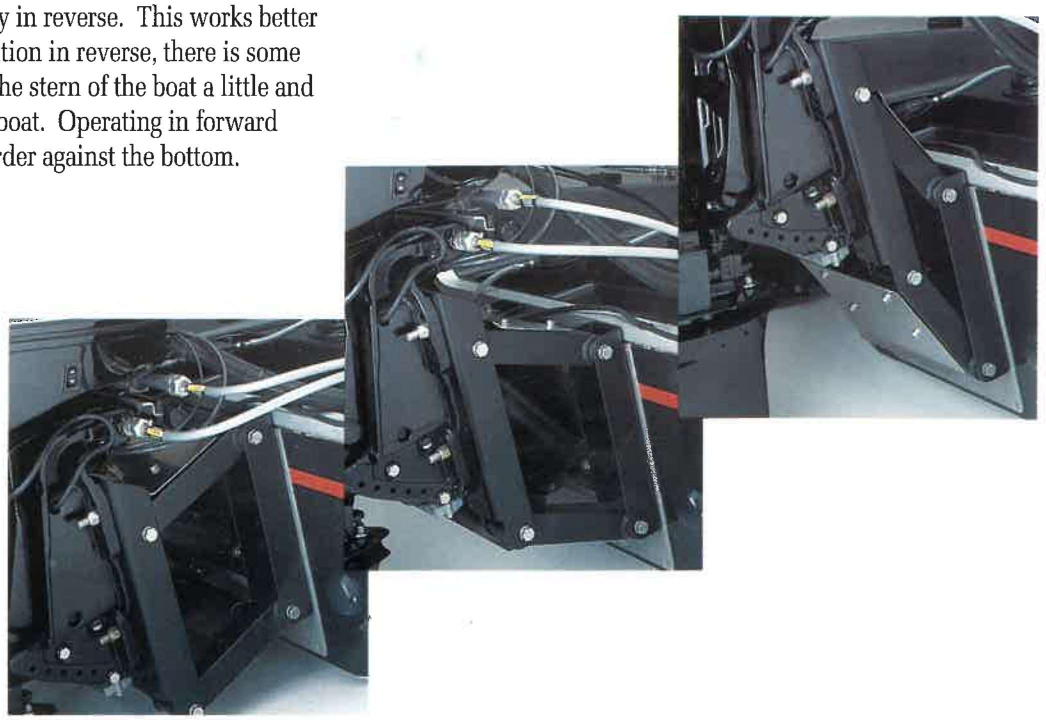

Figure 8-29
The ParaLift's full 12" vertical travel and 12" horizontal setback is shown as engine moves from lowest position (at left) to highest position (at right).

Figure 8-30A (right)
RideGuide outboard power steering pump motor/accumulator

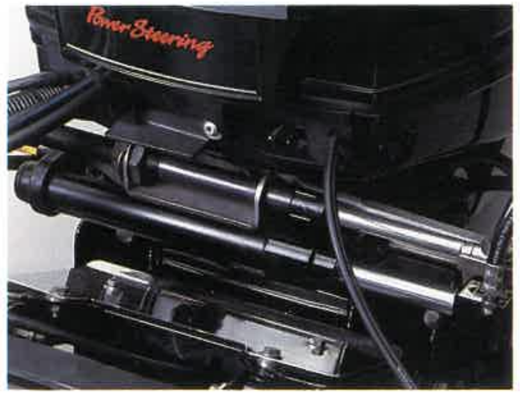

Figure 8-30B (below)
RideGuide outboard power steering cylinder

What is power steering?

Steering torque can be virtually eliminated with power steering. This does for your boat what power steering does for your car. It is available for both stern drives and larger outboards.

Quicksilver RideGuide® outboard power steering provides the ease and convenience of fingertip steering that's much easier to install than a hydraulic steering system (Figures 8-30A and B). As long as the mechanical steering system remains in good working order, the system will provide effortless steering while eliminating feedback normally associated with mechanical systems.

Why do I need a tachometer and speedometer?

A tachometer ("tach") (Figure 8-31) measures engine RPM while the speedometer (Figure 8-32) measures boat speed in miles or kilometers per hour, or knots. A knot equals one nautical mile per hour, so it is incorrect to use the expression, "knots per hour." Here's the relationship between these three units of measurement:

1 Knot = 1.15MPH = 1.852 KM/H
1 MPH = 1.609 KM/H = .870 Knots

An engine is designed to run at wide-open-throttle (WOT), within certain RPM limits. Without a tachometer, the operator has little opportunity to know if the engine is at a dangerously high or low RPM level. Once the correct propeller is selected, the engine will run at wide-open-throttle within the recommended maximum RPM range. Any deviation from this established WOT RPM other than that associated with climatic conditions, elevation, or gross load changes, is an indication of a performance problem.

Figure 8-31
A tachometer measures engine revolutions per minute (RPM).

A speedometer, when used with a tachometer, also will give hints of engine or boat problems, should an unusual speed drop occur. With experience, a boater will be able to detect problems at part throttle using the combination of the tach and speedometer. For a good, solid speed reading, it is important to install the speedometer pickup as low and close to the center of the boat as possible without creating a water disturbance ahead of the propeller or water intakes.

Tachometers and Speedometers as Performance Indicators

For engineering tests, extremely accurate and expensive tachometers are used. RPM information from these instruments provides unquestioned input for engineering evaluation. Tachometers commonly installed in boats are not intended to provide this same degree of accuracy. Therefore, a slight variance from the true RPM is common with these instruments.

Figure 8-32
A speedometer measures boat speed in miles or kilometers per hour, or knots.

The common type of boat speedometer consists of a pitot (pronounced PEE-tow) tube, an instrument panel-mounted gauge which is calibrated to indicate miles per hour (MPH), kilometers per hour (KM/H), or knots, and the connecting tube or hose. The pitot tube is usually mounted on the transom so that the lower portion of the tube remains submerged in undisturbed water when the boat is underway (Figure 8-33). The forward portion of the pitot tube incorporates a hole, which points toward the direction of travel. Some newer outboard models have a pitot tube built into the leading edge of the gear housing strut.

Figure 8-33
Transom-mounted pitot tube

As the boat moves forward, water enters the pitot tube through this hole and compresses the air trapped within the connecting hose and the bellows or Bourdon tube in the gauge. This water-to-air pressure, which varies in relation to the boat speed, actuates the needle movement mechanism, indicating the speed of the boat. The accuracy of the speedometer may suffer from winter freeze damage caused by trapped water in the line or instrument head, from a damaged pitot tube, from weeds, mud, or debris caught on the pitot tube, from a pitot tube that is partially or completely tilted up, or from an improper pitot tube installation location.

For engineering tests, more accurate timing devices are used, such as computers and pressure transducers, whereby water pressure is converted into an electronic signal. This is sent to a computer which then calculates boat speed.

These variables are explained to prepare you for any unusual results that you may obtain in calculating your boat speed, propeller slip, or angle of attack, using the equations in this book.

How do elevation and climate affect performance?

Elevation has a very noticeable effect on the wide-open-throttle (WOT) power of an engine. Since air (containing oxygen) gets thinner as elevation increases, the engine begins to starve for air, like using a supercharger in reverse. If the boat has been set up at a lower altitude and then moved to a much higher altitude, there will be a noticeable reduction in power, thus RPM.

Although some performance can be regained by dropping to a lower-pitch propeller, thus bringing the WOT RPM back into the recommended range, a basic problem still exists. The propeller is too large in diameter for the reduced power output. The experienced marine dealer or a Quicksilver propeller repair station can determine how much diameter to remove from a lower-pitch propeller for specific high-elevation locations. In some cases, a gear ratio change to more reduction is possible and very beneficial. However, this fix is only safe while the power level is reduced. If the engine is again run at a lower altitude, the gear ratio change must be reversed to prevent excessive torque on drive train parts.

It is a fact that weather conditions exert a substantial effect on power output of internal combustion engines. Therefore, established horsepower ratings refer to the power that the engine will produce at its rated RPM under a specific combination of weather conditions now established by the International Standards Organization (ISO).

The marine engine rating code J1228 of the Society of Automotive Engineers (SAE) standardizes the computation of horsepower from data obtained on the dynamometer, correcting all values to the power that the engine will produce at 80.6°F (27°C) temperature, relative humidity of 60%, and a barometric pressure of 29.53 inches (750 mm) of mercury.

Summer conditions of high temperature, low barometric pressure, and high humidity all combine to reduce the engine power. This, in turn, is reflected in decreased boat speeds—as much as two or three miles per hour in some cases (Figure 8-34). Nothing will regain this speed for the boater, but the coming of cool, dry weather.

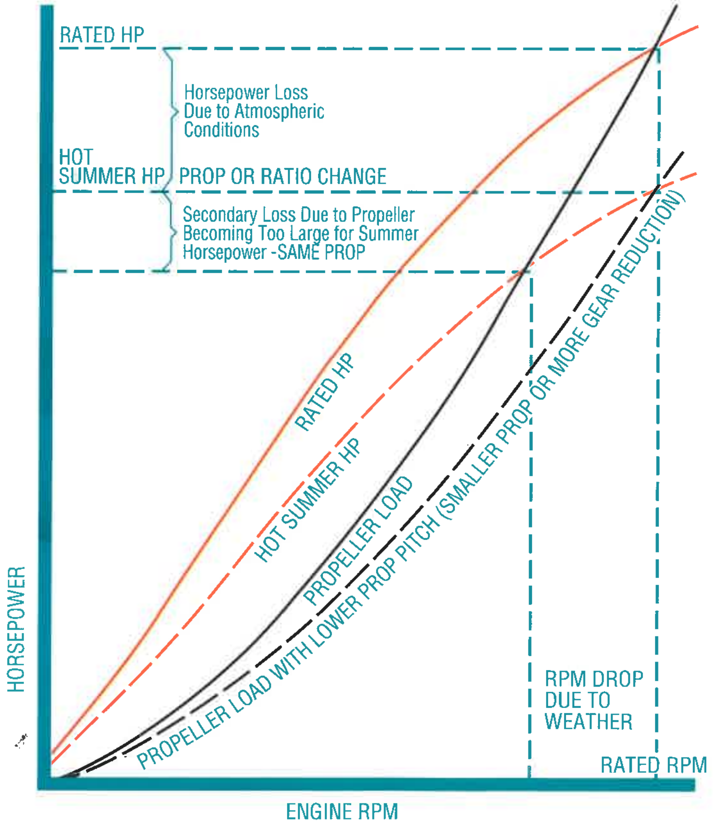

Figure 8-34
The effect of elevation and climate on engine performance

An engine, running on a hot, humid summer day, may encounter a loss of as much as 14% of the horsepower it would produce on a dry, brisk spring or fall day. The horsepower that any internal combustion engine produces depends upon the density of the air which it consumes and, in turn, this density is dependent upon the temperature of the air, its barometric pressure, and water vapor content (humidity).

Accompanying this weather-induced loss of power is a second, but more subtle, loss. At rigging time in early spring, the engine was equipped with a propeller that allowed the engine to turn within its recommended RPM range at full throttle. With the coming of the summer weather and the consequent drop in available horsepower, this propeller will, in effect, become too large. Consequently, the engine may operate at less than its recommended RPM.

Due to the horsepower/RPM characteristics of an engine, this will result in further loss of horsepower at the propeller with an additional decrease in boat speed. This secondary loss, however, can be somewhat regained by switching to a lower-pitch propeller that allows the engine to again run at the recommended RPM.

For boaters to realize optimum engine performance under changing weather conditions, it is essential that the engine be propped to allow it to operate at or near the top end of the recommended maximum RPM range at wide-open-throttle with a normal boat load.

Not only does this allow the engine to develop full power, but equally important, the engine also will be operating in an RPM range that discourages damaging detonation. This, of course, enhances overall reliability and durability of the engine.

What are trim tabs ("trim planes" or "after planes") and what do they do?

Trim tabs or after planes are a pair of flat, movable surfaces that extend aft from the boat bottom, one on each side of center. Each surface is individually adjustable up or down and, on the more sophisticated installations, by a remote control switch (Figure 8-35). These "trim tabs" are not to be confused with the small adjustable fin located on the gear housing just above and behind the propeller and used to help offset steering torque. It is also called a "trim tab."

After planes offer another method of trimming your boat in addition to power trim. When a boat's running attitude exceeds 5°, it is beginning to run increasingly less efficiently. Therefore, stern-heavy boats that need to run at a slow plane (20-25 MPH) will be greatly aided by after planes both in the efficiency and comfort departments.

Other benefits of after planes are faster planing, control of list or boat roll, and additional fuel savings made possible by allowing the boat to run at a lower engine RPM while remaining in an efficient planing attitude.

Figure 8-35
Kiekhaefer K-Planes™ provide efficiency, comfort, and control.

Figure 8-36
Weight concentration far aft is often preferable for top speed but still has some disadvantages.

Figure 8-37
Weight concentration far forward impairs performance, handling, and operator visibility.

How does weight distribution affect boat performance?

Weight distribution is extremely important; it affects a boat's running angle or attitude. For best top speed with a moderate-to fast-planing boat, all movable weight—fuel, battery, anchor, passengers—should be as far aft as possible, to allow the bow to come up to a more efficient angle (3°-5°). But on the negative side of this approach is the problem that, as weight is moved aft, some boats will begin an unacceptable "porpoising" (bouncing). Secondly, as weight is moved aft, getting on plane becomes more difficult (Figure 8-36). Finally, the ride in choppy water with some boats becomes more uncomfortable as the weight goes aft. With these factors in mind, each boater should seek out what weight locations best suit his needs.

Weight and passenger loading placed well forward (Figure 8-37) increases the "wetted area" of the boat bottom and, in some cases, virtually destroys the good performance and handling characteristics of the boat. Operation in this configuration can produce an extremely wet ride, from wind-blown spray, and could even be unsafe in certain weather conditions or where bow steering may occur.

Weight distribution is not confined strictly to fore and aft locations, but also applies to lateral weight distribution (Figure 8-38). Uneven weight concentration to port or starboard of the longitudinal centerline can produce a severe listing attitude that can adversely affect the boat's performance, handling ability, and riding comfort. In extreme rough water conditions, the safety of the boat and passengers may be in jeopardy.

Figure 8-38
Uneven lateral weight distribution can produce severe listing.

What is "blowout?"

Many high-performance boaters are aware of a phenomenon that limits their top speed below what would otherwise be possible with the available horsepower. This phenomenon is commonly called "gearcase blowout," "propeller blowout," or just "blowout." Following is an explanation of why blowout occurs and how to correct it.

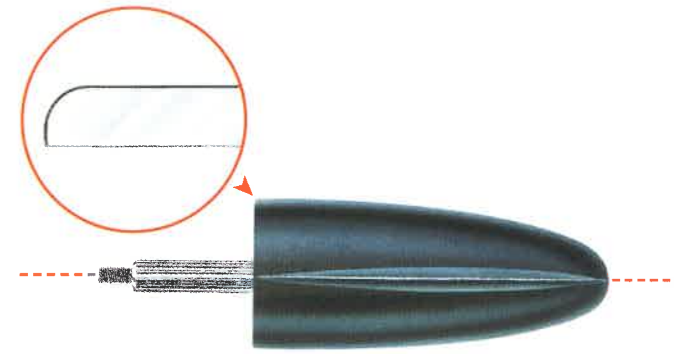

Figure 8-39
Any torpedo rounding at this corner encourages blowout at a lower speed.

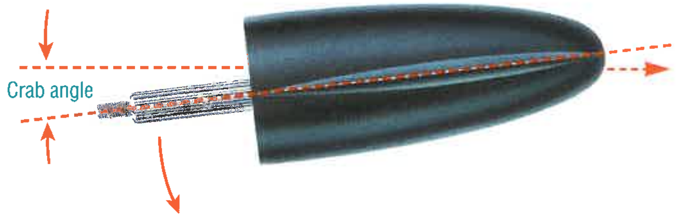

Figure 8-40
Surfacing right-hand rotation propeller pulls the aft end of the gearcase to the right.

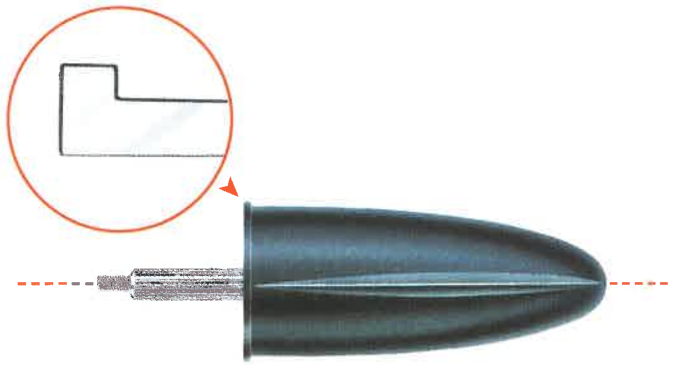

Figure 8-41
A slightly conical-shaped torpedo with a slight raised sharp edge just ahead of the trailing edge can drive the onset of blowout to a notably higher speed.

Why Blowout Occurs

To be practical, the torpedo of a non-racing gearcase or gear housing must be of a diameter and length just sufficient to house the shafts, gears, bearings, shift mechanism, exhaust passage, and a few other related parts. Hydrodynamics designers can only hope to make the exterior shape of the gear housing the best they can (within their design constraints) to deter cavitation from occurring at the torpedo nose or any surface interruptions, such as a lubricant filler hole or water intake. Inevitably, as speed is increased, cavitation will occur.

Since low pressure is the cause of cavitation, anything that further reduces the pressure on any side of the torpedo will hasten cavitation. Trimming the unit out will cause lower pressure on the underside of the torpedo, around the skeg; but an even more insidious culprit is the effect of a surfacing propeller pulling the aft end of the torpedo to the right with a right-hand rotation propeller. This causes lower pressure on the left side because of the angle at which the gearcase is forced to run through the water. This is commonly called the "crab" angle (Figure 8-40). The typical combination of a surfacing right-hand propeller and trimming out for best speed creates an extra-low pressure pocket on the lower left side of the torpedo.

However, cavitation itself does not cause the "blowout." Blowout occurs when the very low pressure cavitation bubbles eventually reach back to the aft end of the torpedo in sufficient quantity to suddenly pull in, or connect up with the engine exhaust gases. The cavitation and exhaust gas linkup is more prevalent with a non-through-hub exhaust propeller.

Once the connection is made, the exhaust follows the cavitation bubbles forward and floods out over the low-pressure side of the gearcase (the left side with a right-hand rotation propeller) and feeds back into the propeller blades, causing a sudden and drastic reduction of lift or thrust generated by the low-pressure side of the propeller blades. This partial unloading of the propeller creates four sudden reactions.

1. The bow-lifting effect of the rake diminishes, causing the bow to drop.
2. The hard-steering torque to the right is suddenly reduced, causing the boat to veer slightly to the left.
3. The reduced load on the propeller allows the engine to rev up by 200 to 300 RPM.
4. The wetter boat bottom and reduced propeller efficiency cause the boat to go slower by perhaps a couple of miles per hour.

How To Correct Blowout

With the latest gearcase designs, blowout should not be a problem below 80 MPH. However, if the problem exists, contact your dealer or the Mercury Service or Hi-Performance department. A special gearcase is available for many V-6 outboards and some stern drives that should cure the problem. The gearcase known by the name "Crescent" has an extended torpedo nose, more rudder area, improved high-speed cooling water intakes, and a cupped skeg, which greatly reduces "crabbing" and steering pull to the right.

Other than running with excessive trim-out, the most significant cause of the blowout is a torpedo that has been buffed in a way that rolls off the trailing edge of the torpedo (Figure 8-39). Some Mercury/Mariner gearcases eliminate this problem by casting the torpedo in a slightly conical shape, leaving a slight raised sharp edge just ahead of the trailing edge of the torpedo (Figure 8-41). This patented feature, which can vary from .005" to .050" in height, retards the connection of exhaust to torpedo cavitation by creating a higher pressure fence much like the diffuser ring or flare on the aft end of a Quicksilver through-hub exhaust propeller, which deters the exhaust from being drawn forward into the low-pressure side of the propeller blades. Within the range given, the higher the bump, the higher the speed protection, but with slight additional drag.

How should I maintain and service my propeller?

Essential to good propeller maintenance is periodic inspection to detect even small dings, which can lead to blade failure if not dressed or repaired. A damaged propeller, even one that only appears slightly damaged by running through silt and sand, can significantly reduce performance efficiency and fuel economy, and can more severely damage itself through cavitation erosion emanating from the blades' irregular leading edges (Figure 8-42). In one test with a damaged propeller, top speed fell more than 13%. Acceleration was off over 37%. Optimum cruise miles slowed 21%. Worse yet, damage usually is not done to each blade uniformly and, therefore, the damage can set up imbalance vibrations that can cause fatigue damage to other parts of the engine or drive. If you boat in shallow or rocky waters, you will want to check your propeller more frequently for possible damage.

Figure 8-42
A damaged propeller blade significantly reduces performance.

Up to a point, dealers can have a propeller restored to like-new condition; however, extreme damage can be more expensive to repair than the cost of a replacement. Minor damage corrected early on can prevent much more serious and costly repair later on to both the propeller and other parts of the engine.

Propeller repair, as well as customizing, is available from your local Mercury, Mariner, and Force Outboard and MerCruiser stern drive and inboard dealer and the Mercury Hi-Performance Group.* Such customizing can include adjustments to pitch, rake, cup, and blade thickness.

To aid in the future removal of the propeller, liberally coat the propeller shaft spline with Quicksilver Anti-Corrosion Grease, 2-4-C, or Special Lube 101. To assure that the propeller remains secure on the shaft during the season, periodically check the self-locking prop nut for tightness.

*Stainless steel propellers only

What is marine fouling?

Fouling is a kind of unwanted buildup (usually animal/vegetable derived) occurring on the boat's bottom and lower unit (Figure 8-43). Fouling creates additional drag which reduces boat performance. In fresh water fouling results from dirt, vegetable matter, algae or slime, chemicals, minerals, and other pollutants. In salt water, barnacles, moss, and other marine growth often produce a dramatic build-up of material quickly. So it's important to keep the hull as clean as possible in all water conditions to maximize boat performance.

Special hull treatments, such as anti-fouling paint, will reduce the rate of bottom fouling. However, because lower units (outboard and stern drive) are made primarily of aluminum, be sure to select an anti-fouling paint having a copper-free, organo-tin base. The BIS Tri Butyl Tin Adipate (TBTA) base paint will not set up a galvanic corrosion "cell" as it is completely compatible with aluminum and avoids any electrolysis problems connected with many other paints. Applied according to instruction, it is very effective in controlling marine fouling.

Figure 8-43
Marine fouling on the boat bottom and drive units.

Figure 8-44
Sacrificial anodes

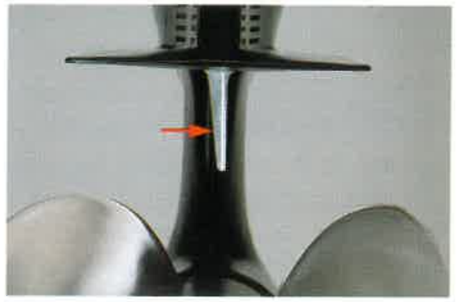

Figure 8-45
Trim tab

Figure 8-46
Transom-mounted anodic kit

How can I protect my engine against corrosion?

The leading cause of corrosion damage is galvanic corrosion, the electrochemical interaction between different metals. It is most hazardous where lower units, both outboard and stern drive, are immersed in salt water, brackish water, and many inland waters with high conductivity caused by pollution. This is true no matter what brand of power you own.

The corrosion reaction occurs when electrons flow between dissimilar metals connected or grounded through water. In the process, one of the two metals is eaten away. This damaging corrosion can be eliminated by providing a sacrificial metal—zinc or aluminum—which will preferentially corrode to protect the lower unit, or by installing a Quicksilver MerCathode® system to your boat.

Sacrificial anodes are available in several forms (Figure 8-44). MerCruiser stern drives and most Mercury, Mariner, and Force outboards utilize a trim tab on the antiventilation plate (Figure 8-45). Stern drives and higher horsepower outboards have additional anodes mounted at the outer transom plate (stern drives) or the transom bracket (outboards). A transom-mounted anodic kit is available to provide additional protection, if deemed necessary (Figure 8-46). The anodes' main purpose is for corrosion protection. By their very nature, they deteriorate rapidly (Figure 8-47) and must, therefore, be constantly inspected and regularly replaced. The engine should not be partially tilted out of the water. If the anode is out of the water, protection for the parts still in the water is lost. Anodes are never to be painted, nor should the area under the anode be painted as the ground must be maintained. Newer outboards and stern drives will be discontinuing using the trim tab as a sacrificial anode. Anodic protection will be found in other locations.

Figure 8-47
Corroded anodes

When a docked boat is plugged in to shore power, destructive galvanic corrosion currents can flow through the important, shock protection, neutral ground wire. The Galvanic Isolator, (Figure 8-48) which is wired in series with the ground wire, blocks the destructive corrosion currents while maintaining the safety function of the neutral ground.

The Quicksilver MerCathode System incorporates a solid state controller and two small electrodes (Figure 8-49) installed through the boat transom below the waterline. The entire system is powered by the boat's existing 12-volt battery. One electrode (B) senses the level of corrosion protection needed. It then directs the controller (A) to maintain the necessary protective current flow from the other electrode (C) to the immersed metal requiring protection. And, since no sacrificial action takes place between the metals, the protection is permanent. The Quicksilver MerCathode System self-adjusts to change in chemical content and to the temperature of the water, as well as for exposure of metal surfaces due to abrasion and other factors. There are no moving parts throughout the entire system. There is no significant drain on the 12-volt battery (180 ma maximum), and the system has absolutely no effect on swimmers or the ecology.

Figure 8-48
Galvanic isolator

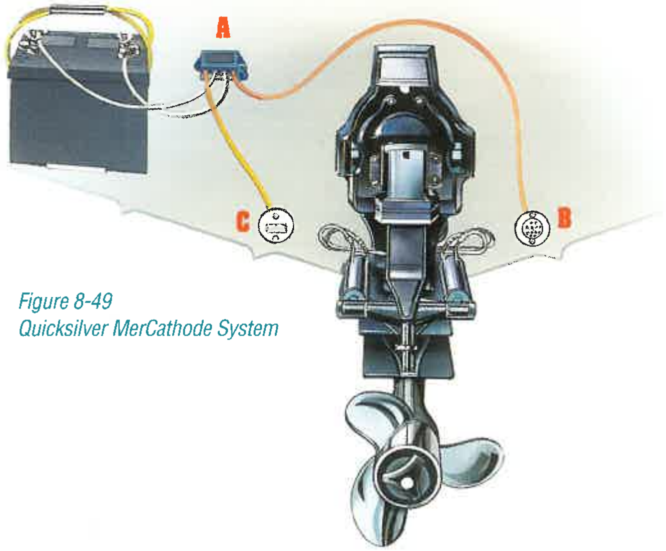

Figure 8-49
Quicksilver MerCathode System

Index

Index

How To Order Additional Copies Of This Book

For additional copies of this book, contact your local Mercury, Mariner, or Force outboard or MerCruiser stern drive and inboard dealer. Or, send a check or money order for $5.00 to Quicksilver Propeller Book, P.O. Box 3900, Peoria, IL 61614.

Acknowledgements

This book represents a compilation of previous works with current propeller philosophy, theory, technology, and practical application. This fourth edition would not have been possible without the input of the primary author of the previous editions, Dick Snyder. The combined experience of Dick and the Mercury Marine staff members listed below represents over 350 years in propeller design and manufacturing. Contributors to this edition, listed in their respective areas of expertise, are:

Hydrodynamics:	Mike Frazzell, Hugh Gilgenbach, Roger Koepsel, Mike Karls, Ron Steiner, Bob Hetzel, Dennis Cavanaugh
Manufacturing:	Steve Fries, Bob Sommerfeldt, Dean Wickman
Marketing:	Ben Rowell, Mike Nichols
Advertising:	Bill Gius; The Hiebing Group Advertising Agency
Service:	Jeff Ryder, Kent Morrison, Jerry Hodkiewicz, Bob Kachelek, John Beaudoin

Blade design of the Quicksilver HighFive, Laser II, and Mirage propellers is patented under U.S. Patent Number 4,802,822. Others pending.

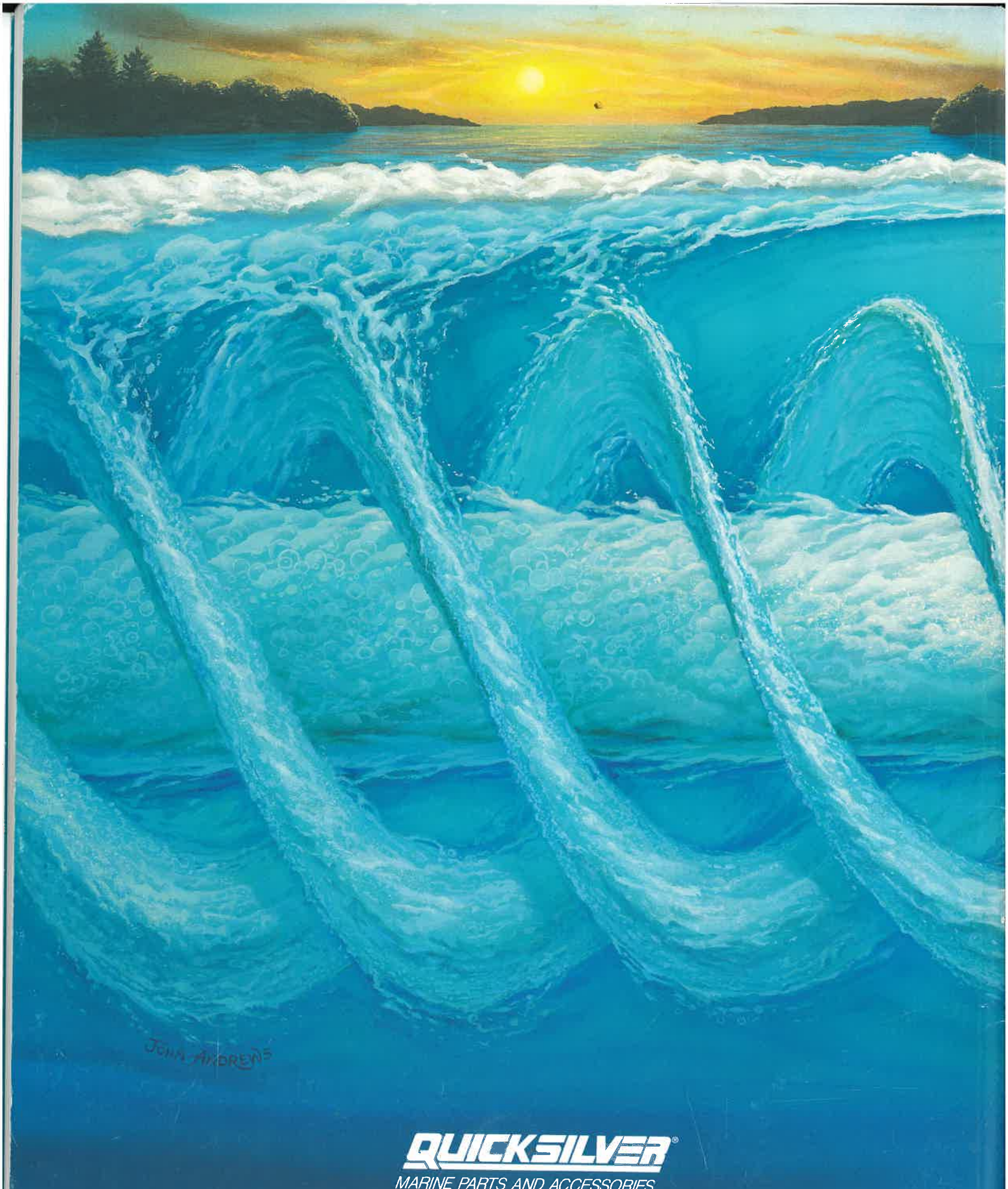

QUICKSILVER®

MARINE PARTS AND ACCESSORIES

Setting the standard. As always.

Quicksilver Marine Parts and Accessories are products of Mercury Marine

A **BRUNSWICK**MARINE COMPANY

Printed in U.S.A. P/N 90-86144-92