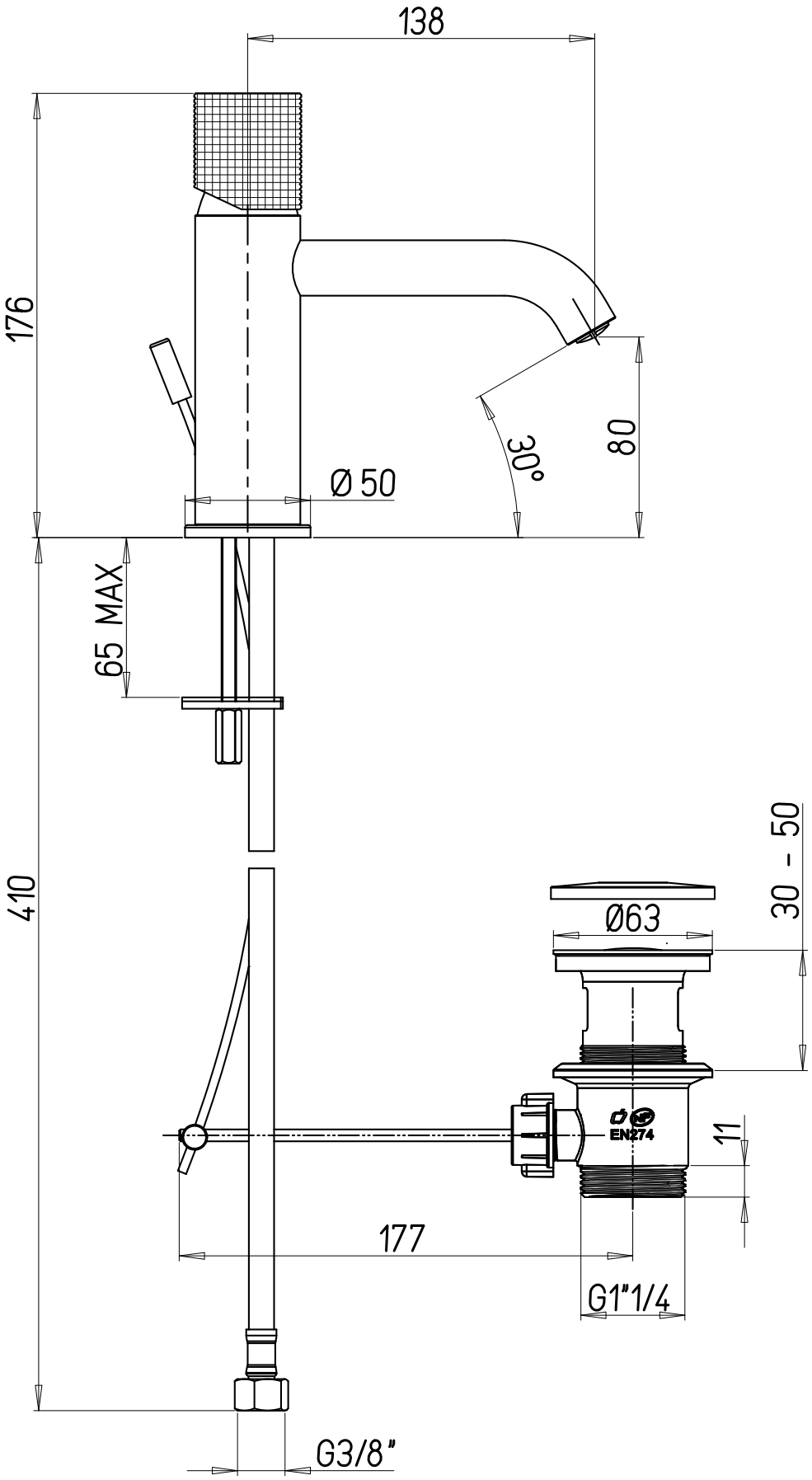
138
176
80
30°
Ø 50
65 MAX
410
30 - 50
Ø63
EN274
11
177
G1"1/4
G3/8"