Age Range 1 1/2-4
Weight Limit: 50 lbs.
Surfaces: Asphalt/Hard Surfaces
Speed: 2.5 For/Rev
Colors: Pink Body and Seat/ Black Wheels
Intro: 2011
Suggested Retail: $99.99
Box Dimensions:
38 x 26.375 x 17.125
36 lbs
Warranty One Year Vehicle
6 Months Battery

POWER WHEELS by Fisher-Price

X2248

BLITZ-GIRL BARBIE JEEP

6V Preschool Series WALMART

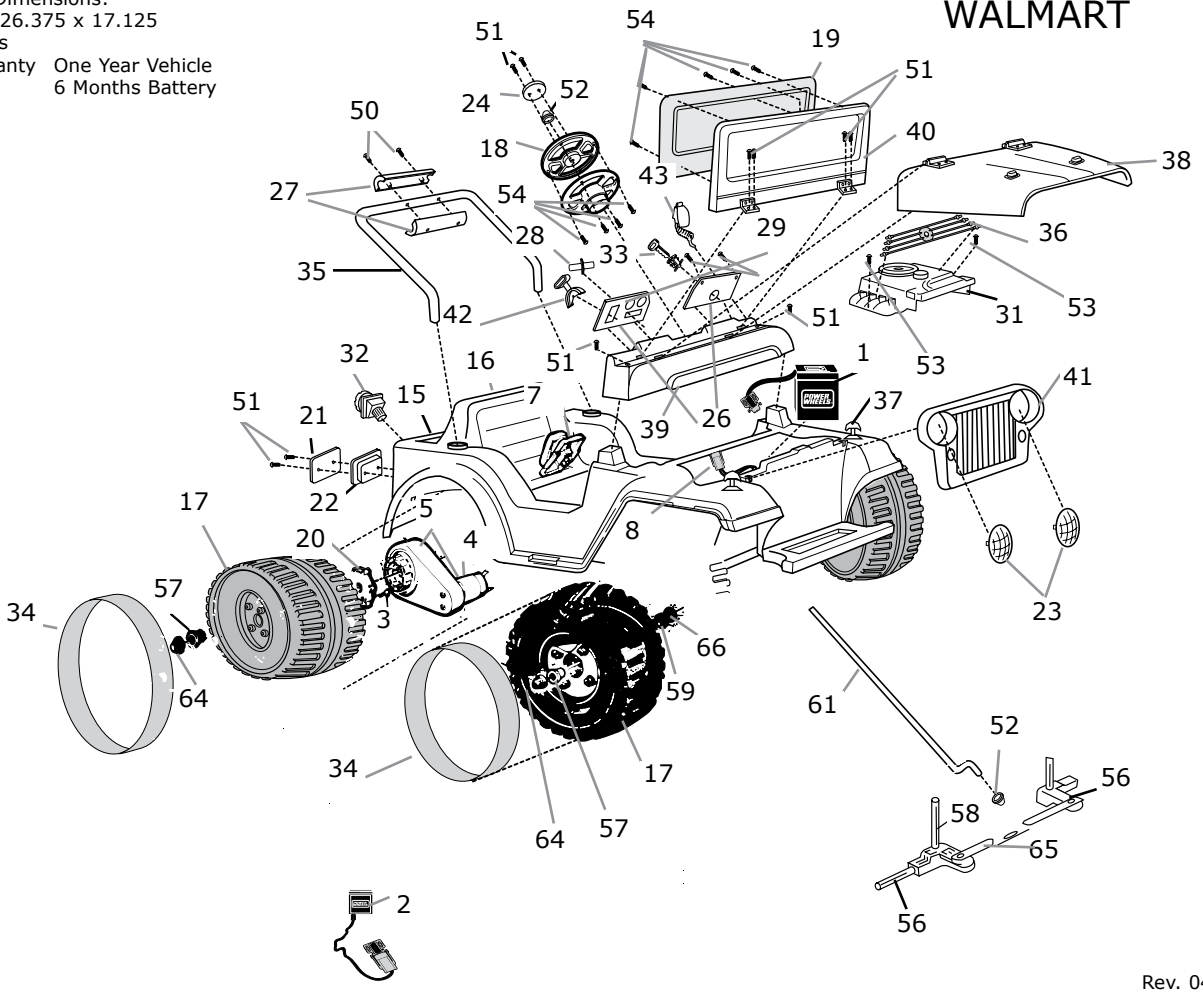

Rev. 04/12/06

Working / Electrical Parts

Item No.	Description	Part No	QTY
1.	6V Battery	00801-1900	1
2.	6V Charger	00801-1781	1
3.	**Gearbox Assy**	**74580-9269**	**1**
4.	**Motor Pinion Assy**	**74590-9539**	**1**
5.	**Motor Gearbox Assy**	**74780-9509**	**1**
7.	Footboard Assy.	74765-9389	1
8.	**Harness Assy**	**N9356-9799**	**1**

Plastic / Other Parts

Item No.	Description	Part No	QTY
15.	Body	N/A	1
16.	Seat (part of body)	N/A	1
17.	Wheel	76133-2459	4
18.	Steering Wheel	N9356-9719	1
19.	Windshield	N/A	1
20.	Driver	73233-2239	1
21.	Lens Set	N/A	1
22.	Taillight Housing Set	N/A	1
23.	Headlight Lens	N/A	2
24.	Steering Wheel Cap	74550-2729	1
26.	Busy Box	T1961-9679	1
27.	Sport Bar Cover Set	N/A	1
28.			
29.	Dash Knob	N/A	2
31.	False Motor	74780-2379	1
32.	Gas Cap	N/A	1
33.			
34.	Traction Band Set (4)	3800-7390	1
35.			1
36.	Spark Plug Wires	N/A	1
37.	Hoodlatch Assy	N/A	2
38.	Hood	T1961-6119	1
39.	Dash	T1961-2139	1
40.	Windshield Frame	N/A	1
41.	Grill	74350-2149	1
42.	Pretend Shifter	N9732-2229	1

Hardware / Metal Parts

Item No.	Description	Part No	QTY
50.	6 x 1 1/2 Screw	N/A	2
51.	8 x 1 Screw (Order Hardware Bag)	N/A	12
52.	.437 Cap Nut	0801-0226	2
53.	8 x 18 x 1 Screw	N/A	2
54.	10 x 1/2 Screw	0801-0255	
56.	Front Axle	73241-4509	2
57.	7/16 Round/Axle Bushing	74550-2689	3
58.	Axle Post Support	N/A	2
59.	Round Bushing	N/A	4
61.	Steering Column	N9356-4409	1
64.	.354 Cap Nut	0801-0604	4
65.	Steering Linkage Assy	76181-4229	1
66.	5/16 Washer	0801-0253	2

Parts Not Shown

Item No.	Description	Part No	QTY
	Parts Bag	T1961-9289	1
	Hardware Bag	N9356-9279	1
	Owners Manual	W6199-0920	1
	Decal Sheet	W6200-0310	1
	Adhesive Clip	N/A	1
	Control Switch	00801-1773	1
	Front Post Bushing	N/A	2
	Spacer, wheel	73233-2369	1
	Rear Axle	R8932-4509	1
	Rear Axle Spacer	N/A	1
	Footswitch	**00801-1761**	**1**
	Center Hub	M5727-2449	4
	Cable Clamp	00801-1450	

N/A = Not Available

Bold and Underlined parts are to be purchased and installed by Service Centers only. These items may not be sold directly to consumers by Service Centers or Fisher-Price.