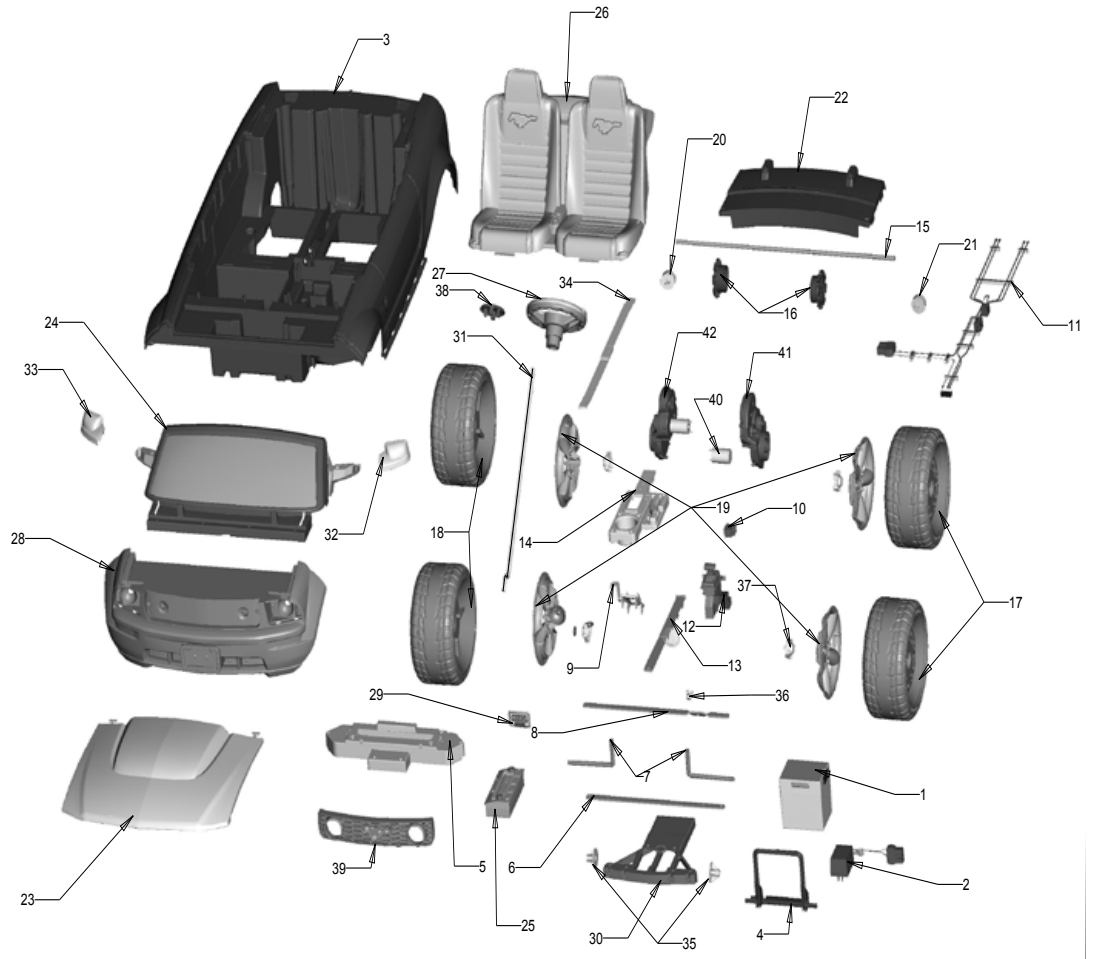

W9257
Boss Mustang
Power Wheels Advanced

Age Range:	3 and up
Weight Limit:	130 lbs
Surfaces:	Hard and Grass Surfaces
Speed:	2.5 & 5 MPH Forward
	2.5 MPH Reverse
Colors:	Blue Body, Black Wheels
Intro:	2011
Suggested Retail:	$299.99
Box Dimensions:	30.9 x 18.4 x 51.8
Warranty:	One Year Vehicle
	Six Months Battery

POWER WHEELS by Fisher-Price®

Item	Part #	Description	QTY
1	00801-1869	12 Volt Battery	1
2	00801-1778	12 Volt Charger w/Probe	1
3	N/A	Body	
4	3800-7809	Battery Retainer	1
5	W9257-2119	Front Module	1
6	J4390-4009	Crossbar for Mustang	1
7	J4390-4509	Front Axle	2
8	J4390-9159	Steering Linkage for Mustang	1
9	W9257-9309	Footboard Assembly for Mustang	1
10	**00801-2039**	**Footswitch (Plunger Type)**	**1**
11	**P5920-9799**	**Wiring Harness for Mustang**	**1**
12	J4390-9209	Shifter for Mustang	1
13	N/A	Wire Cover	
14	J4390-2469	Center Console for Mustang	1
15	J4390-4519	Rear Axle for Mustang	1
16	J4390-2269	Wheel Driver for Mustang	2
17	J4390-2279	Left Wheel for Mustang	2
18	J4390-2289	Right Wheel for Mustang	2
19	N/A	Wheel Cover for Mustang	
20	J4390-2909	Left Exhaust for Mustang	1
21	J4390-2479	Right Exhaust for Mustang	1
22	W9257-9419	Rear Deck/ Spoiler for Mustang	1
23	W9257-9459	Hood for Mustang	1
24	Y8208-9709	Windshield/Dash Assembly (Orange)	1
25	P5920-9529	Soundbox for Mustang	1
26	W9257-9759	Seat for Mustang	1
27	J4390-9769	Steering Wheel for Mustang	1
28	W9257-9809	Front Bumper Assembly for Mustang	1

Item	Part #	Description	QTY
29	00801-1518	Large Power Wheel Emblem	1
30	J4390-2829	Bumper Support for Mustang	1
31	J4390-4409	Steering Column for Mustang	1
32	3800-8227	Mirror w/cover bag (left and right)	1
33	See # 32	Mirror w/cover bag (left and right)	
34	74440-5349	Seatbelt Lap Style (Black)	1
35	B9785-2229	.437 Bushing	2
36	00801-1620	Steering Column Cap (Fastener .354)	1
37	N/A	Hubcap Center for Mustang	
38	J4390-2789	Steering Wheel Cap	1
39	P5920-2859	Lower Grill	1
40	**00968-2717**	**# 7R Motor Pinion**	**2**
41	**00968-2820**	**# 7R Gearbox**	**2**
42	**00968-2921**	**# 7R Motor Gearbox Assembly**	**2**

Parts Not Shown

Part #	Description	QTY
J4390-2649	Key for Mustang	1
P5920-9269	Hardware Bag for Mustang	1
W9257-9259	Parts Bag for Mustang	1
W9257-0311	Main Label Sheet for Mustang	1
W9257-0320	Boss Label (Driver Side)	1
W9257-0321	Boss Label (Passenger Side)	1
W9257-0920	Manual for Mustang	1
00801-1775	**Switch- (shifter)(rocker type)**	**1**
00905-0116	3/8" - 16 Lock Nut	2
0801-0226	Cap Nut .437 - Black	2

Bold and underlined parts are to be purchased and installed by Service Centers only. These items may not be sold directly to consumers by Service Centers or Fisher-Price.

8/4/2015 11:17