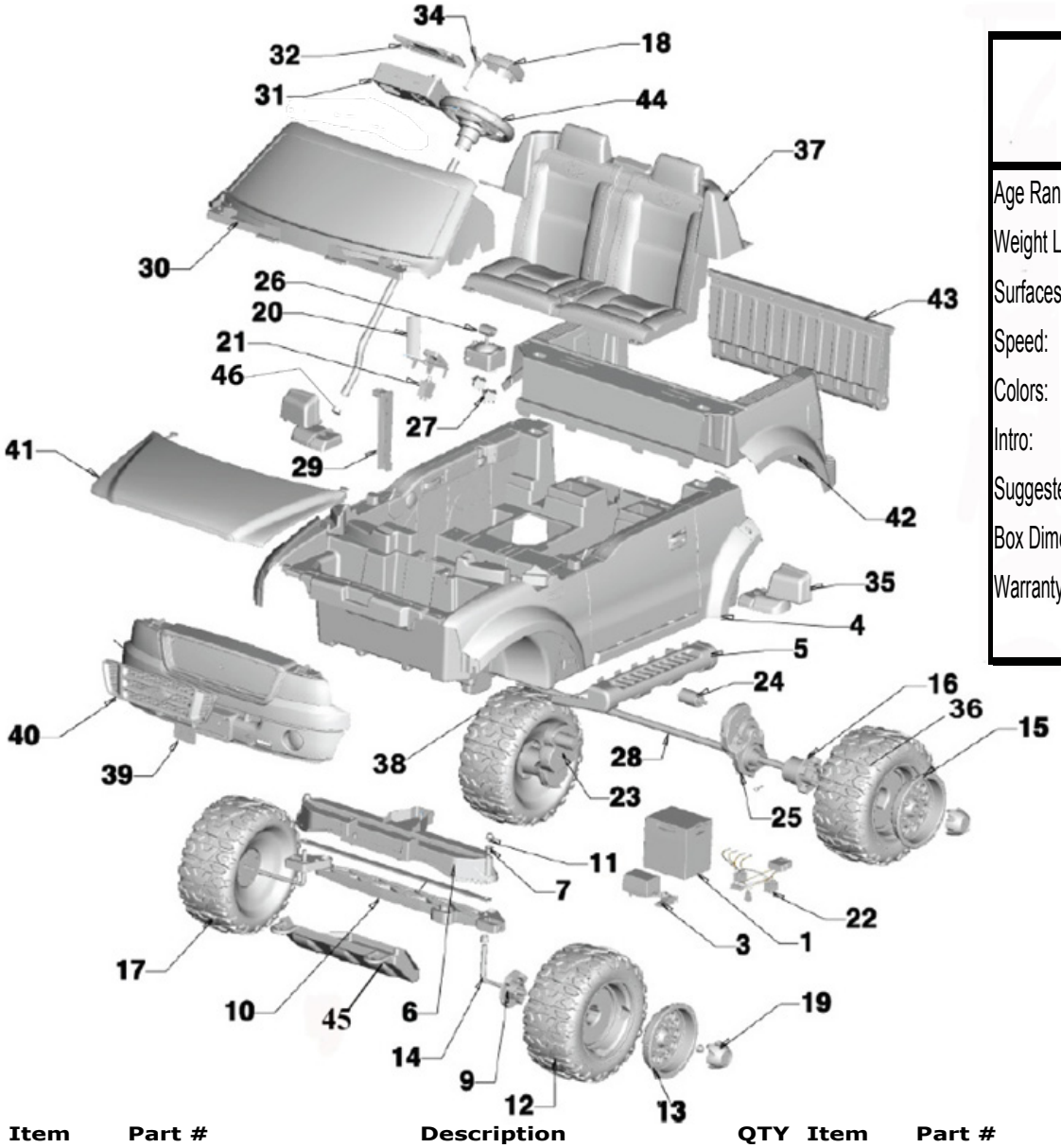

W1070
Ford F-150
PW Advanced

Age Range:	3+
Weight Limit:	130 lbs
Surfaces:	Hard surfaces, grass, gravel
Speed:	2.5 and 5 mph forward, 2.5 mph reverse
Colors:	Blue Exterior,Black wheels and Seats
Intro:	2011
Suggested Retail:	$369.99
Box Dimensions:	35.875" x 29.875" x 51.500" 89.5 lbs
Warranty:	One Year Vehicle
	Six Months Battery

POWER WHEELS by Fisher-Price®

Item	Part #	Description	QTY	Item	Part #	Description	QTY
1	00801-1869	BATTERY, 12 VOLT	1	32	K8285-2779	RADIO BATTERY COVER	1
3	00801-1778	CHARGER 12V PROBE	1				
4	N/A	BODY	1	34	C3493-9049	KEY HOUSING	1
5	W0030-2729	STEP BAR	2	35	3900-1124	MIRRORS (LEFT AND RIGHT)	1
6	W1070-9159	FRONT MODULE	1	36	K8285-2239	REAR WHEEL, LEFT	1
7	K8285-2169	BUSHING	4	37	W1070-9859	SEAT	1
9	K8285-2429	FRONT INNER RIM	2	38	K8285-2039	REAR WHEEL, RIGHT	1
10	W1070-9209	STEERING LINKAGE	1	39	00801-1518	LARGE PW EMBLEM	1
11	0801-0226	.437 RETAINER - PALNUT	4	40	W1070-9909	FRONT GRILLE w/Bumper&Lights	1
12	K8285-2239	WHEEL, LEFT	1	41	W1070-9659	HOOD	1
13	L6348-6249	RIM FRONT OUTER - CHROME	2	42	N/A	TRUCK BED	1
14	K8285-4509	FRONT AXLE	2	43	W1070-9059	TAILGATE	1
15	L6348-6179	RIM REAR OUTER - CHROME	2	44	K8285-9069	STEERING WHEEL ASSEMBLY	1
16	BJM25-2279	DRIVER/INNER REAR RIM	2	45	W1070-2049	FRONT BUMPER SUPPORT	1
17	K8285-2039	WHEEL, RIGHT	1	46	J4394-2149	STEERING COLUMN CAP/Retainer	1
18	K8285-2199	STEERING WHEEL CAP	1	47	K8285-4459	CROSSBAR	1
19	L6348-6189	HUBCAP, CENTER	4				
20	W1070-9309	FOOTBOARD ASSEMBLY	1			**Parts Not Shown**	
21	**00801-2039**	**FOOTSWITCH, PLUNGER**	**1**		K8285-9269	HARDWARE BAG	1
22	**T6991-9799**	**F-150 WIRING HARNESS - TYPE 12V**	**1**		W1070-9249	PARTS BAG	1
23	**00968-2938**	**#7R MOTOR GEARBOX ASSM**	**2**		K8285-4009	STEERING COLUMN	1
24	**00968-2720**	**#7R MOTOR PINION**	**2**		K8285-2509	DOOR HANDLE	2
25	**00968-2823**	**#7R GEARBOX**	**2**		W1070-0920	OWNER'S MANUAL	1
26	K8285-9319	SHIFTER	1		W1070-0310	LABEL SHEET	1
27	**00801-1756**	**SWITCH CONTROL (rocker)**	**2**		W1070-0311	LABEL SHEET	1
28	K8285-4519	REAR AXLE	1		00801-1712	WIRE CLIP	2
29	W1070-2799	CHANNEL COVER	1		74440-5349	SEAT BELT	1
30	W1070-9759	DASH/WINDSHIELD/RADIO & COVER	1		W1070-2999	SKID PLATE	1
31	**K8285-9529**	**RADIO w/ RADIO BATTERY COVER**	**1**		3800-7809	BATTERY RETAINER	1

4/15/2015 13:50

Bold and underlined parts are to be purchased and installed by Service Centers only. These items may not be sold directly to consumers by Service Centers or Fisher-Price.