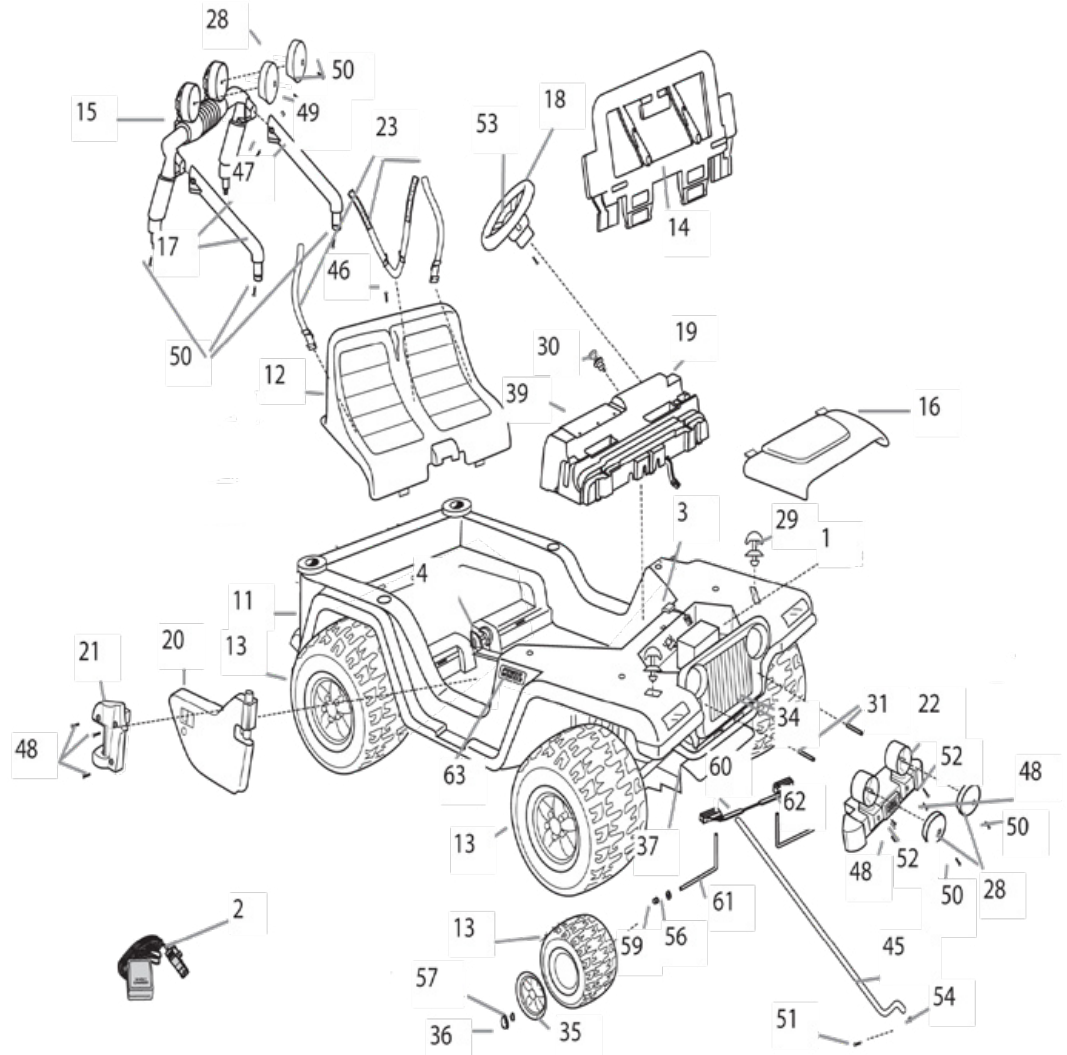

T6138
Tough Talking Jeep
12V Advanced Series

Age Range:	3 years and up
Weight Limit:	130 Lbs.
Surfaces:	Grass/Hard Surfaces
Speed:	2.5 For/Rev
	5.0 For
Colors:	Black Body/ Black Wheels
Intro:	2010
Suggested Retail:	$249.99
Box Dimensions:	33.38 x 18.38 x 44.75
Warranty:	One Year Vehicle
	Six Months Battery

Item	Part Number	Description	QTY
1	00801-1869	12V Single Battery	1
2	00801-1778	12V Single Charger	1
3	**C2390-9799D**	**Main Harness**	**1**
4	74310-9239	Shifter Assembly	1
11	N/A	Body	1
12	T6138-2319	Seat	1
13	B7659-2459	Wheel	4
14	B0155-2619	Windshield	1
15	B7659-9219	Roll Bar	1
16	3800-9141	Hood	1
17	B7659-9379	Roll Bar Support	2
18	T6138-2379	Steering Wheel	1
19	T6138-9259	Dash w/Soundbox/Microphone	1
22	T6138-9189	Front Bumper	1
23	74440-5349	Seatbelt Set	1
28	T6138-2169	KC Light Cover	4
29	T6138-9559	Chrome Hood Latch	2
30	75840-9409	Key Assembly	1
31	H3427-2529	Spacer	2
34	T6138-6849	Grille	1
35	K4564-2469	Hubcap	4
36	T6138-2679	Hubcap Center	4
37	T6138-2119	Front Module	1
39	T6138-9659	Soundbox w/microphone	1

Item	Part Number	Description	QTY
45	H4803-4409	Steering Column	1
46	N/A	8 x 1 Screw	5
47	N/A	8-32 x 1.625" Screw	2
48	N/A	10 x 1 Screw	11
49	00801-1277	8 Acorn Lock Nut	2
50	N/A	10 x 1/2 Screw	10
51	0912-8001	8 x 3/4 Screw	1
52	0914-0040	8 x 3 Screw (Order Hardware Bag)	2
53	00801-1565	5/32" x 1 1/2" Pin	1
54	00801-1620	Steering Column Cap (.354 Retainer)	1
56	0801-0195	3/16 Washer	4
57	0801-0226	.437 Cap Nut	6
59	74550-2689	7/16 Round/Axle Bushing	2
60	75840-4409	Cross Bar	1
61	B7659-4519	Front Axle	2
62	B7659-9419D	Steering Linkage	1
63	00801-1518	Power Wheels Emblem Large	1

Parts Not Shown

Part Number	Description	QTY
T6138-9279	Parts Bag	1
T6138-9269	Hardware Bag	1
T6138-0920	Owners Manual	1
T6138-0310	Decal Sheet	1

Part Number	Description	QTY
00801-1775	**Switch Control (Shifter Rocker)**	**2**
00968-2921	**#7R Motor Gearbox Assembly**	**2**
00968-2820	**# 7R Gearbox**	**2**
00968-2206	**# 7R 19T Motor Pinion**	**2**
L7820-4529	Rear Axle	1
74020-9839	Footboard Assembly	1
3800-7809	Battery Retainer	1
0801-0578	1/4 x 1 1/2 Screw	2
74460-2249	Wheel Driver	2
T6138-2289	Channel Cover	1
00801-1503	Small Power Wheels Emblem	1
00801-1566	**Footswitch (plunger-type)**	**1**
T6138-2729	Steering Wheel Cap for Tough Talking	1
T6138-9029	Right and Left Dash Caps Bag	1
00801-1450	Cable Clamp	1

8/4/2015 15:32

Bold and underlined parts are to be purchased and installed by Service Centers only. These items may not be sold directly to consumers by Service Centers or Fisher-Price.