Age Range: 3 and up
Weight Limit: 130 lbs.
Surfaces: Grass/Asphalt/Hard Surfaces
Speed: 2.5 For/Rev
5.0 For
Colors: Pink Body/BlackWheels

Intro: 2009
Suggested Retail: $176.00
Box Dimensions: 18.375" x 33.375" x 44.75"; 67 lbs.
Warranty: One Year Vehicle
6 Months Battery

T4871
Barbie Jammin' Jeep Refresh

12V
Advanced Series

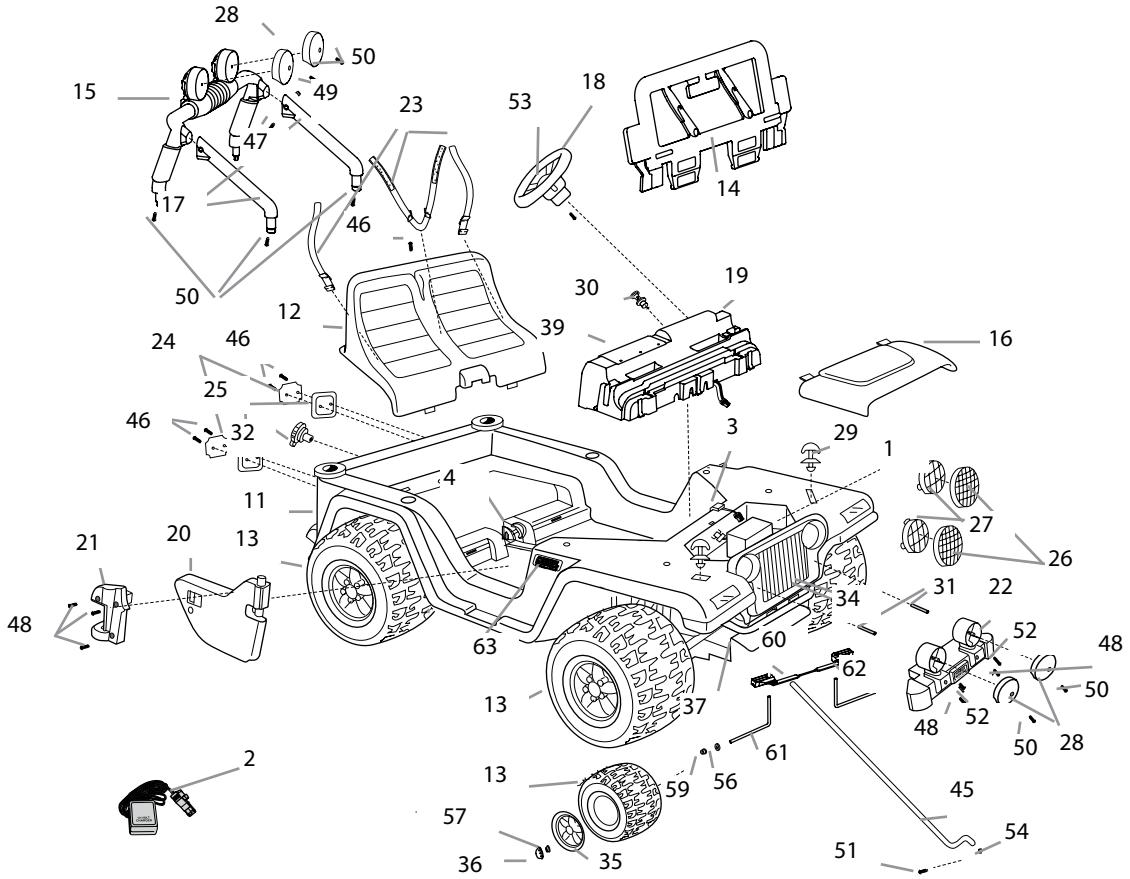

Item	Part Number	Description	QTY
1	00801-1460	12V Single Battery	1
2	00801-1480	12V Single Charger	1
3	**C2390-9799D**	**Main Harness Assembly**	**1**
4	74310-9239	Shifter Assembly	1
11	N/A	Body	1
12	L7820-2319	Seat	1
13	B7659-2459	Wheel	4
14	L7820-2619	Windshield	1
15	L7820-9219	Sport/Roll Bar	1
16	3800-8349	Hood	1
17	L7820-9379	Sport/Roll Bar Support	2
18	L7820-9039	Steering Wheel	1
19	L7820-9259	Dash w/ Radio	1
20	L7820-9229	Door (Right)	1
21	L7820-9029	Hinge Bag (left & right)	1
22	3800-8351	Brushguard/Bumper	1
23	H3427-5339	Seatbelt Set	1
24	73233-2279	Taillight Lens Set	1
25	L7820-2749	Taillight Housing Set	1
26	77770-2469	Headlight guard	2
27	74450-2279	Headlight Lens	2
28	L7820-2169	KC Light Cover	4
29	L7820-9559	Hood Latch	2
30	75840-9409	Key Assembly	1
31	H3427-2529	Spacer	2
32	L7820-2439	Gas Cap	1
34	L7820-2849	Grill	1

Item	Part Number	Description	QTY
35	B7659-2469	Hubcap	4
36	B7659-2679	Hubcap Cover	4
37	L7820-2119	Front Module	1
39	**L7820-9319**	**Radio**	**1**
(Consumer Replaceable By Ordering Part 19 - Dash w/Radio Assy.)			
45	H3427-4259	Steering Column	1
46	N/A	8 x 1 Screw	5
47	N/A	8-32 x 1.625" Screw	2
48	N/A	10 x 1 Screw	11
49	N/A	8 Acorn Lock Nut	2
50	N/A	10 x 1/2 Screw	10
51	0912-8001	8 x 3/4 Screw	1
52	N/A	8 x 3 Screw (Order Hardware Bag)	2
53	00801-1565	5/32" x 1 1/2" Pin	1
54	00801-1620	Steering Column Cap (.354 Retainer)	1
56	0801-0196	7/16 Washer	4
57	0801-0227	.437 Cap Nut	6
59	74550-2689	7/16 Round/Axle Bushing	2
60	75840-4409	Cross Bar	1
61	B7659-4519	Front Axle	2
62	B7659-9419D	Steering Linkage	1
63	00801-1503	Power Wheels Emblem	1

Part Number	Description	QTY
L7820-0921	Owners Manual	1
L7820-0311	Decal Sheet	1
00801-1756	**Switch Control (Shifter Rocker)**	**1**
See #21	See #21	
L7820-9209	Door (Left)	1
00968-2912	**Motor Gearbox Assembly**	**2**
00968-2802	**Gearbox W/out Motor**	**2**
00968-2702	**Motor Pinion Assembly**	**2**
B7659-4529	Rear Axle	1
C2390-7829	Footboard Assembly	1
3800-7809	Battery Retainer	1
0801-0578	1/4 x 1 1/2 Screw	2
74460-2249	Wheel Driver	2
L7820-2489	Channel Cover	1
H3427-2459	Radio Battery Cover w/screws & washers	1
00801-1503	Small Power Wheels Emblem	1
00801-1566	**Footswitch (plunger-type)**	**1**
00801-1450	Cable Clamp	1

Parts Not Shown

Part Number	Description	QTY
L7820-9080	Parts Bag	1
H3427-9289	Hardware Bag	1

3/16/2016 13:52

Bold and underlined parts are to be purchased and installed by Service Centers only. These items may not be sold directly to consumers by Service Centers or Fisher-Price.

* See service builtin 184

N/A = Not Available