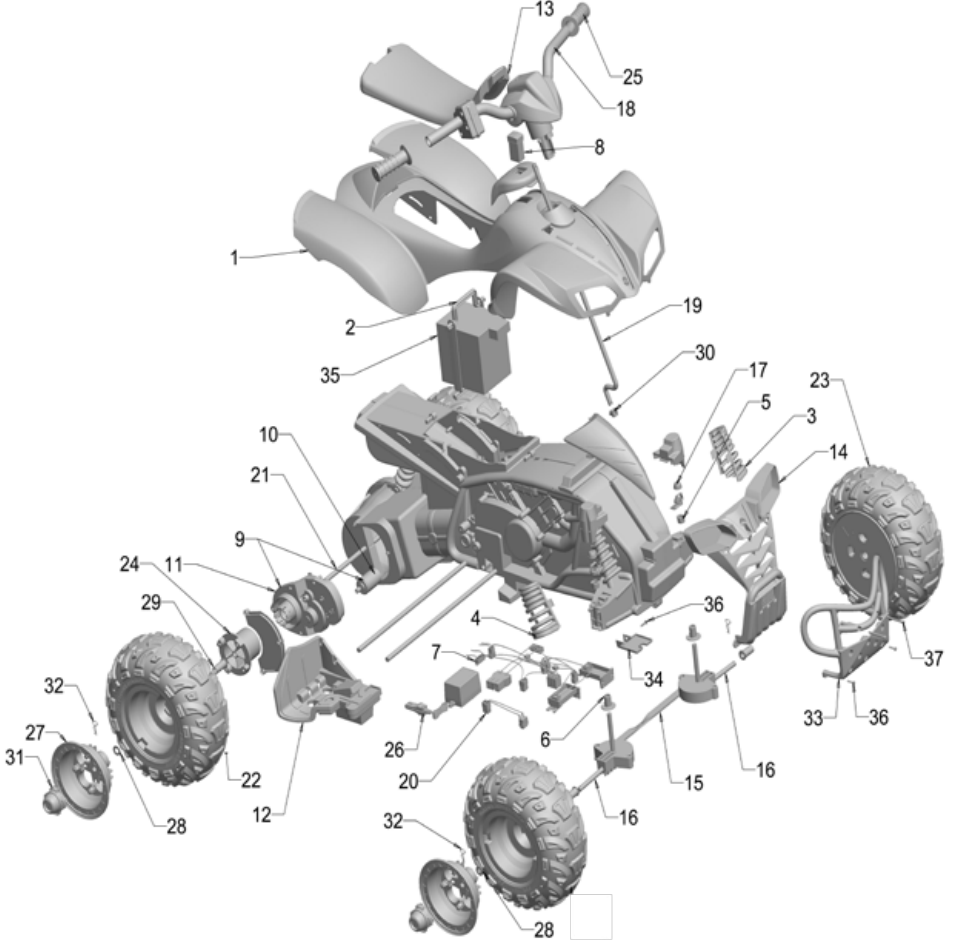

R3142
KFX Red Ninja
12 Volt Advancded Series

Age Range:	3+
Weight Limit:	65 lbs
Surfaces:	Ultimate Terrain
Speed:	2.5 Mph Forward/Reverse
	5.0 Mph Forward
Colors:	Red Body/Black Wheels
Intro:	2009
Suggested Retail:	$221.49
Box Dimensions:	19.6"x25.2"x40.7" - 55lbs
Warranty:	One Year Vehicle
	Six Months Battery

ITEM	PART #	DESCRIPTION	QTY
1	N/A	BODY	1 EA
2	B9272-2419	BATTERY RETAINER	1 EA
3	N/A	LEFT SPRING COVER	1 EA
4	N/A	RIGHT SPRING COVER	1 EA
5	J8472-2639	BUSHING-UPPER	2 EA
6	J8472-2649	BUSHING-LOWER	2 EA
7	**P5066-9799**	**HARNESS ASSY.***	**1 EA**
8	00801-1773	CONTROL SWITCH F/R	1 EA
9	**00968-2912**	**MOTOR GEARBOX ASSY.***	**2 EA**
10	**00968-2702**	**MOTOR PINION***	**2 EA**
11	**00968-2802**	**GEARBOX***	**2 EA**
12	3800-8894	FOOTBOARD ASSY.	1 EA
13	B9272-2159	SEAT	1 EA
14	N/A	FRONT CLIP	1 EA
15	J8472-9060D	STEERING LINKAGE	1 EA
16	P5066-4519	FRONT AXLE	2 EA
17	0801-0226	.437 RETAINER	2 EA
18	P9723-9729	HANDLEBAR ASSY.	1 EA
19	J8472-4439	STEERING COLUMN*	1 EA
20	**P9723-9549**	**Turbo Switch W/Harness**	**1 EA**
21	P5066-4509	REAR AXLE	1 EA
22	B9272-2269	REAR WHEEL	2 EA
23	B9272-2339	FRONT WHEEL	2 EA
24	74460-2249	DRIVER	2 EA
25	J5248-2439	HAND GRIP	2 EA
26	00801-1480	12V CHARGER W/PROBE	1 EA
27	J8472-2469	WHEEL COVER	4 EA
28	0801-0196	7/16 FLAT WASHER	7 EA
29	73610-2689	WHEEL BUSHING	2 EA
30	00801-1621	STEERING COLUMN CAP	1 EA
31	J8472-2959	HUBCAP	4 EA
32	00905-0116	NYLOK HEXNUT	4 EA
33	B9272-9359	BRUSH GUARD	1 EA
34	J8472-2859	STEERING COLUMN PLATE	1 EA
35	00801-1460	12V BATTERY	1 EA
36	0912-8001	8 X 3/4" SCREW	4 EA
37	00912-8008	8 X 2" SCREW	2 EA

Parts Not Shown

00801-1567	Wrench 9/16" (Assembly Tool)	1 EA
00801-1566	**FOOTSWITCH-PLUNGER TYPE**	**1 EA**
P9723-0920	OWNERS MANUAL	1 EA
P9723-9259	PARTS BAG	1 EA
P5066-9289	HARDWARE BAG	1 EA
74287-9729	**PC BOARD***	**1 EA**
P9723-0310	DECAL SHEET	1 EA
00801-1503	PW EMBLEM	1 EA
73690-4289	METAL NECK	1 EA
73610-2689	BUSHING .437 LONG BLACK	2 EA

4/16/2013

*When repairing parts for warranty, please refer to Additional Labor Rates under Reference Material on the B2B

Bold and underlined parts are to be purchased and installed by Service Centers only. These items may not be sold directly to consumers by Service Centers or Fisher-Price.