Age Range: 3 and up
Weight Limit: 130 lbs.
Surfaces: Grass/Asphalt/
Other Hard Surfaces
Speed: 2.5 For/Rev
5.0 For
Colors: Pink Body/Purple Seat
Intro: 2007
Suggested Retail: 299.99
Box Dimensions: 24.880 x 35 x 51
96 lbs
Warranty One Year Vehicle
Six Months Battery

rev. 10/17/07

POWER WHEELS by Fisher-Price®

M0409

Cadillac Escalade Barbie Refresh

12V Advanced Series

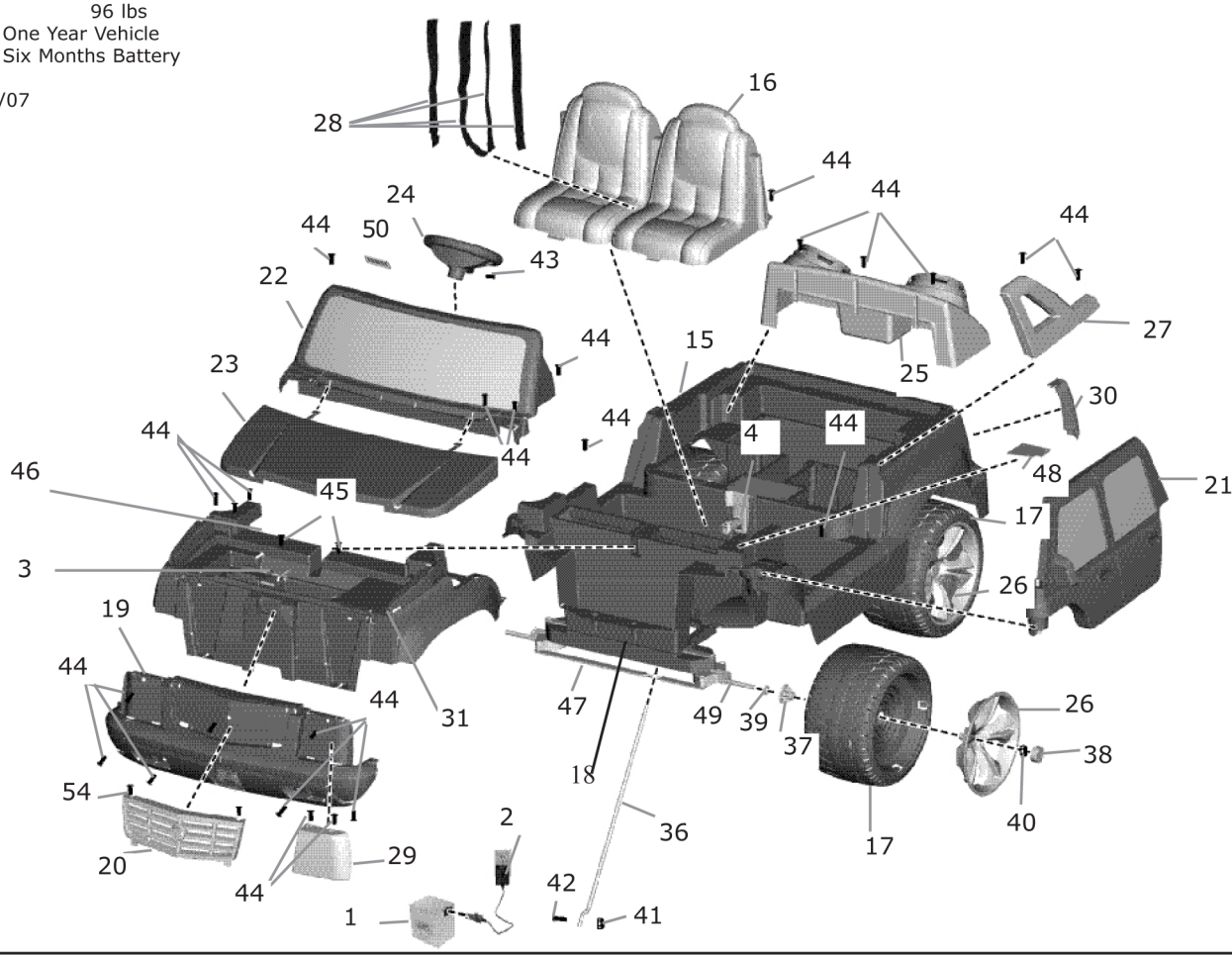

Item No.	Description	Part No.	Qty.
Working / Electrical Parts			
1.	12V Battery	00801-1460	1
2.	12V Charger w/Probe	00801-1480	1
3.	**Harness Assembly**	**H0440-9799**	**1**
4.	Shifter Assembly	H0440-9159	1
Plastic / Other Parts			
15.	Body	N/A	1
16.	Seat	J5246-2659	1
17.	Left Wheel	G3740-2409	2
18.	Front Module	J5246-2309	1
19.	Bumper	J5246-9359	1
20.	Grille	H0440-6379	1
21.	Left Door	M0409-9729	1
22.	Windshield/Dash/Radio	M0409-9639	1
23.	Hood	J5246-2619	1
24.	Steering Wheel	H0440-9089	1
25.	Speaker Box Assembly	J5246-9409	1
26.	Wheel Covers	G3740-6439	4
27.	Wings (Right & Left)	3800-7906	1
28.	Seatbelt Set	74440-5349	1
29.	Headlights (Bagged)	3800-7897	1
30.	Taillights (Bagged)	3800-7898	1
31.	Front Clip w/Battery Ret	NA	1

Item No.	Description	Part No.	Qty.
Hardware / Metal Parts			
36.	Steering Column	H0440-4479	1
37.	Bushings	B9785-2229	2
38.	Hubcaps	G3740-2429	4
39.	7/16 Washer	0801-0196	2
40.	3/8-16 Lock Nut	00905-0116	2
41.	8-32 Lock Nut (Order Hardware Bag)	N/A	1
42.	8-32 x 3/4 Screw (Order Hardware Bag)	N/A	1
43.	6 x 1 1/2 Screw (Order Hardware Bag)	N/A	1
44.	8 x 3/4 Screw	0912-8001	36
45.	1/4 x 1 1/4 Screw (Order Hardware Bag)	N/A	2
46.	***Radio** (Consumer replaceable by ordering part # 22 windshield/dash/radio)	**M0410-9319R**	**1**
47.	Steering Linkage Assy.	H0440-9429	1
48.	Door Plate	H0440-4459	2
49.	Front Axle	H0440-4539	2
50.	Radio Cover w/Screws	H3427-9459	1

No.	Description	Part No.	Qty.
Parts Not Shown			
	Large Parts Bag	3800-8404	1
	Hardware Bag	H0440-9289	1
	Owners Manual	M0409-0920	1
	Decal Sheet	M0409-0310	1
	Right Door	M0409-9709	1
	Assembly Tool	00801-1567	1
	Speaker Wire Harness	**H0440-9449**	**1**
	Channel Cover	J5246-2259	1
	Mtr Gearbox Assm (16T)	**00968-2931**	**2**
	Gearbox (16T)	**00968-2815**	**2**
	Motor	**00968-2701**	**2**
	Driver	74460-2249	2
	Lower Crossbar	H0440-4419	1
	Footboard Assy.	J5246-9399	1
	Right Wheel	G3740-2419	2
	Battery Life Indicator	J4394-9059	1
	.437 Cap Nut	0801-0226	4
	Rear Axle	H0440-4519	1
	Control Switch (Shift/Rock)	**00801-0923**	**1**
	Footswitch (Plunger Type)	**00801-1566**	**1**
	Key Assembly	H0440-9049	1
	Speaker w/Wire	**H0440-9459**	**1**
	High Speed Lock Out Screw	00801-0198	1

N/A = Not Available

Bold and Underlined parts are to be purchased and installed by Service Centers only. These items may not be sold to consumers by Service Centers or Fisher-Price.
***Please see Service Bulletin 177 regarding the Radio on this vehicle.**