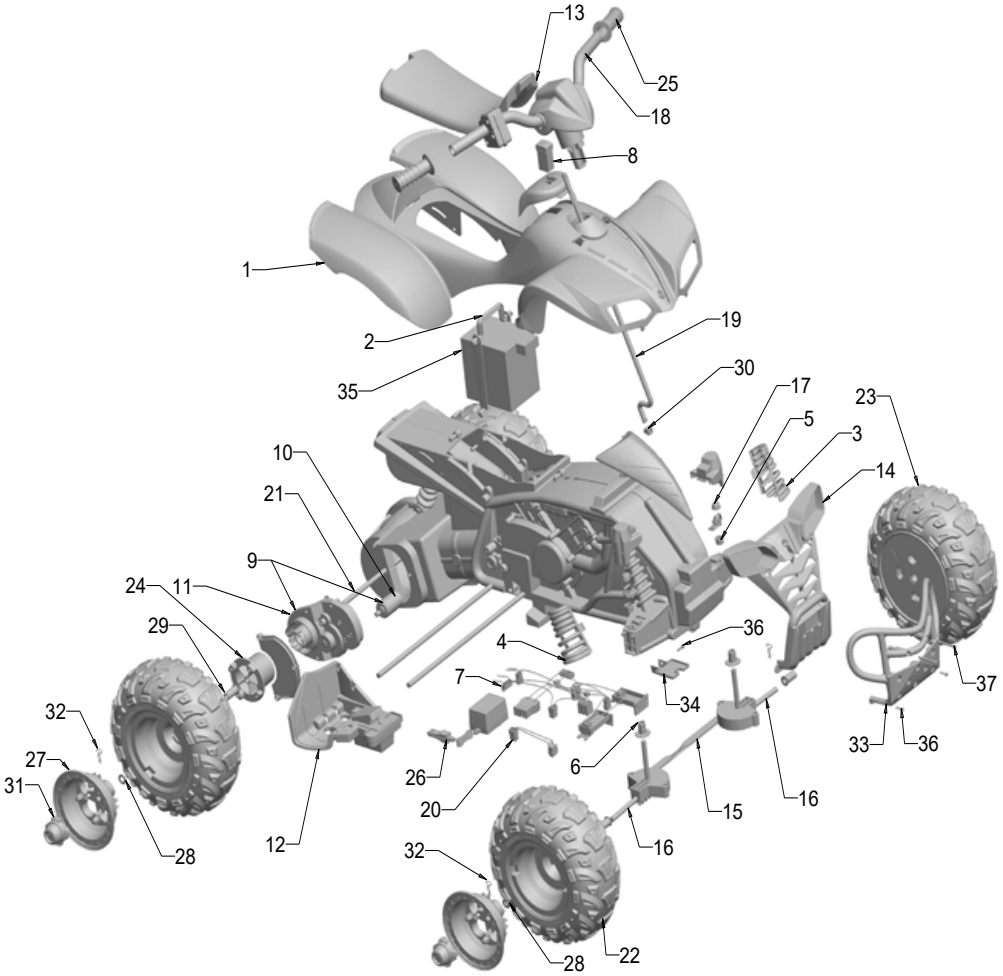

K0450
Kawasaki KFX Ninja
12 Volt Advancded Series

Age Range:	3+
Weight Limit:	65 lbs
Surfaces:	Ultimate Terrain
Speed:	2.5 Mph Forward/Reverse
	5.0 Mph Forward
Colors:	Blue Body/Black Seat
Intro:	2006
Suggested Retail:	$199.99
Box Dimensions:	19.6"x25.2"x40.7" - 55lbs
Warranty:	One Year Vehicle
	Six Months Battery

ITEM	PART #	DESCRIPTION	QTY	ITEM	PART #	DESCRIPTION	QTY
1	N/A	BODY	1 EA	27	J8472-2459	WHEEL COVER	4 EA
2	B9272-2419	BATTERY RETAINER	1 EA	28	0801-0196	7/16 FLAT WASHER	7 EA
3	N/A	LEFT SPRING COVER	1 EA	29	J8472-2379	WHEEL BUSHING	4 EA
4	N/A	RIGHT SPRING COVER	1 EA	30	00801-1620	STEERING COLUMN CAP	1 EA
5	J8472-2639	BUSHING-UPPER	2 EA	31	J8472 -2469	HUBCAP	4 EA
6	J8472-2649	BUSHING-LOWER	2 EA	32	J8472-4429	COTTER PIN	4 EA
7	**J8472-7070D**	**HARNESS ASSY.**	**1 EA**	33	H4437-2259	BRUSH GUARD	1 EA
8	00801-0885	CONTROL SWITCH F/R	1 EA	34	J8472-2859	STEERING COLUMN PLATE	1 EA
9	**00968-2913**	**MOTOR GEARBOX ASSY.**	**2 EA**	35	00801-0638	12V BATTERY	1 EA
10	**00968-2703**	**MOTOR PINION**	**2 EA**	36	0912-8001	8 X 3/4" SCREW	4 EA
11	**00968-2809**	**GEARBOX**	**2 EA**	37	00912-8008	8 X 2" SCREW	2 EA
12	J8472-9152d	FOOTBOARD ASSY.	1 EA				
13	B9272-2159	SEAT	1 EA				
14	3800-7252	FRONT CLIP	1 EA				
15	J8472-9060D	STEERING LINKAGE	1 EA				
16	J8472-4519	FRONT AXLE	2 EA				
17	0801-0226	.437 RETAINER	2 EA				
18	J8472-9729	HANDLEBAR ASSY.	1 EA				
19	J8472-4439	STEERING COLUMN	1 EA				
20	**J8472-9659**	**TURBO WIRE HARNESS**	**1 EA**				
21	J8472-4509	REAR AXLE	1 EA				
22	J8472-2269	RIGHT WHEEL	2 EA				
23	J8472-2339	LEFT WHEEL	2 EA				
24	J8472-2299	DRIVER	2 EA				
25	J5248-2439	HAND GRIP	2 EA				
26	00801-0972	12V CHARGER W/PROBE	1 EA				

Parts Not Shown

00801-1566	**FOOTSWITCH-PLUNGER TYPE**	**1 EA**
J8472-0920	OWNERS MANUAL	1 EA
J8472-9259	PARTS BAG	1 EA
J8472-9289	HARDWARE BAG	1 EA
74287-9729	**PC BOARD**	**1 EA**
K0450-0310	DECAL SHEET	1 EA
00801-1503	PW EMBLEM	1 EA
73690-4289	METAL NECK	1 EA
00801-1531	**TIP/LIFT SWITCH**	**2 EA**
00801-1520	**Switch Signalux - 2 prong**	**1 EA**

© 2006 Mattel

Bold and underlined parts are to be purchased and installed by Service Centers only. These items may not be sold directly to consumers by