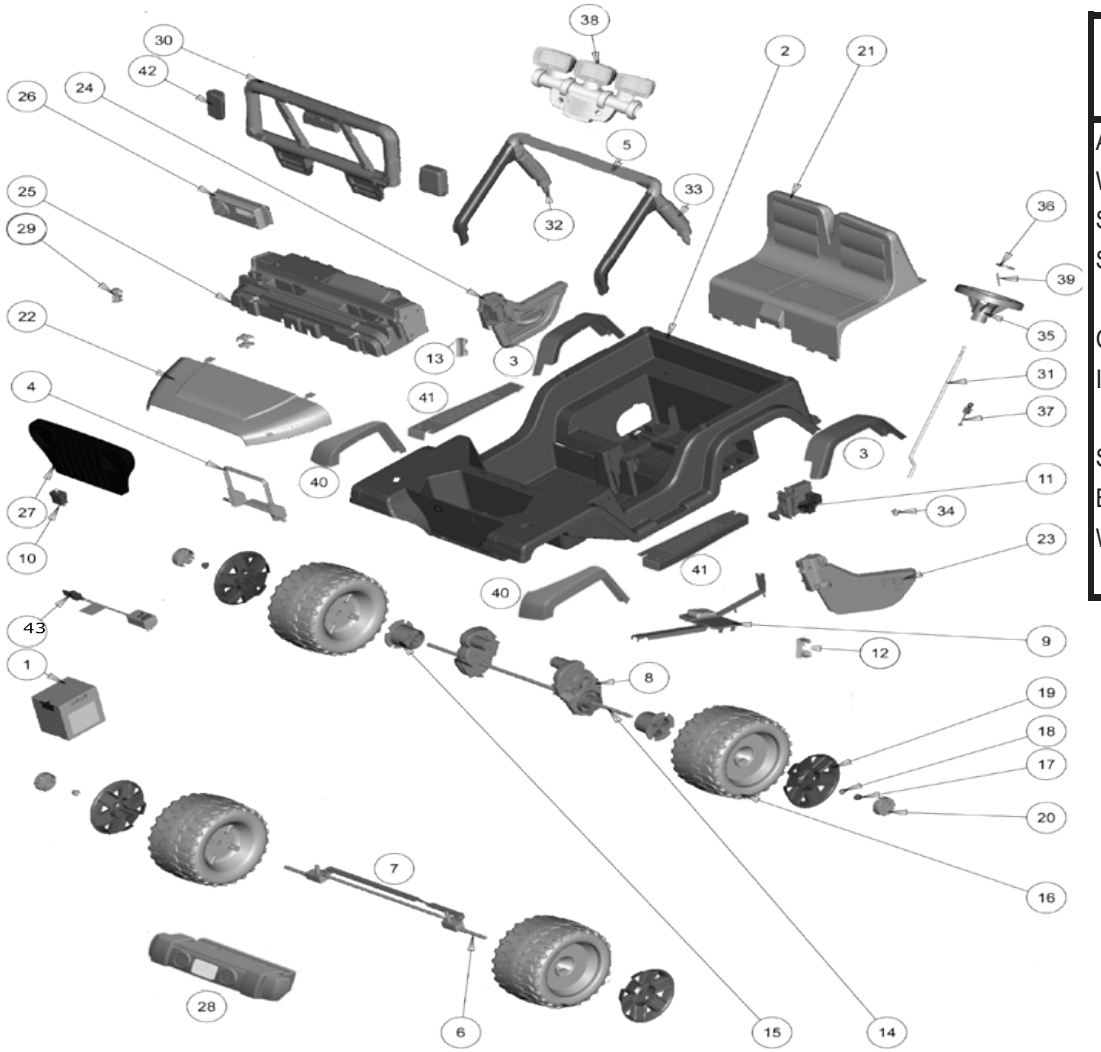

GCT05
Jeep Wrangler Rubicon
Advanced Series

Age Range:	3 years and up
Weight Limit:	130 lbs.
Surfaces:	Grass/Hard Surfaces
Speed:	2.5 mph For/ Low/Rev
	5.0 mph Forward
Colors:	Blue Body/Black Wheels
Intro:	2018
Suggested Retail:	$291.20
Box Dimensions:	25.5" L x 11.5" W x 54.2" H
Warranty:	One Year Vehicle
	Six Months Battery

POWER WHEELS by Fisher-Price®

Item	Part #	Description	QTY
1	00801-1869	12 Volt Battery (1)	1
2	N/A	Body	
3	3900-2823	Rear Fender Set (left and right) (gray)	1
4	3800-7809	Battery Retainer	1
5	CBG65-9209	Rollbar for Jeep (gray)	1
6	3900-2678	Front Axle for Jeep	2
7	CBG65-9199	Steering Linkage for Jeep	1
8	**3900-3187**	**Motor Gearbox Assembly 23T**	**2**
9	CBG65-9309	Footboard Assembly (green)	1
10	**00801-2039**	**Footswitch - (plunger type)**	**1**
11	CBF64-9319	Shifter for Jeep (gray)	1
12	3900-6613	Hinge Cover Set for Jeep GCT05	1
13	See #12	See # 12	
14	3900-2679	Rear Axle for Jeep	1
15	L2170-2249	Wheel Driver	2
16	BCK85-2659	Wheel for Jeep (black)	4
17	00905-0116	Lock Nut	4
18	74550-2689	7/16 Round/Axle Bushing (black).	2
19	W9418-6469	Hubcap for Jeep	4
20	W9418-6679	Hubcap Center for Jeep	4
21	3900-6614	Seat for Jeep GCT05	1
22	3900-6611	Hood for Jeep GCT05	1
23	3900-6609	Left Door for Jeep GCT05	1
24	3900-6610	Right Door for Jeep GCT05	1
25	3900-6612	Dash w/Soundbox for Jeep GCT05	1
26	3900-5526	Soundbox w/Mircophone for FFR92	1
27	CBF64-6459	Grille for Jeep (chrome)	1
28	CBG65-9809	Front Bumper w/Logo for Jeep (black)	1

Item	Part #	Description	QTY
29	CBG65-9859	Hoodlatch for Jeep	2
30	CBG65-2359	Windshield for Jeep (gray)	1
31	3900-2680	Steering Column for Jeep	1
32	3900-2604	Rollbar Support Right (front & back)	1
33	3900-2605	Rollbar Support Left (both pieces)	1
34	00801-1620	Steering Column Cap (Fastener .354) Blk.	1
35	3900-6442	Steering Wheel (gray)	1
36	3900-6441	Steering Wheel Button (gray)	1
37	W9418-9369	Key for Jeep	1
38	CBG65-9409	Light Bar Front and Back	1
39	00801-1565	5/32" x 1 1/2" Pin	1
40	3900-2824	Front Fender Set (left and right)	1
41	3900-2825	Running Board Set (left & right)	1
42	3900-2704	Mirror Set for Jeep (dark gray)(CBG65)	1
43	00801-1778	12 Volt Charger w/Probe	1

Parts Not Shown

Part #	Description	QTY
00968-2821	**7R Gearbox (21-22-23)**	**2**
3900-3719	**Motor Pinion Assembly (23T)**	**2**
3900-2705	Hardware Bag for Jeep	1
CBG65-9239	Parts Bag for Jeep	1
00801-1775	**Switch Control - (shifter)(rocker type)**	**2**
BCK85-9799	**Wiring Harness for Jeep**	**1**
CBG65-0310	Label Sheet for Jeep for CBG65	1
CBG65-0721	Manual for Jeep	1
W8675-6559	Shovel Bracket	1
W8675-2449	Shovel for Arctic Cat (black)	1
3900-6256	Bumper Cap Set for Jeep CBG61 (orange)	1
3900-7769	Front Axle Spring for Jeep GWX91	2

Bold and underlined parts are to be purchased and installed by Service Centers only. These items may not be sold directly to consumers by Service Centers or Fisher-Price.

© 2019 Mattel
12/9/2021 14:07