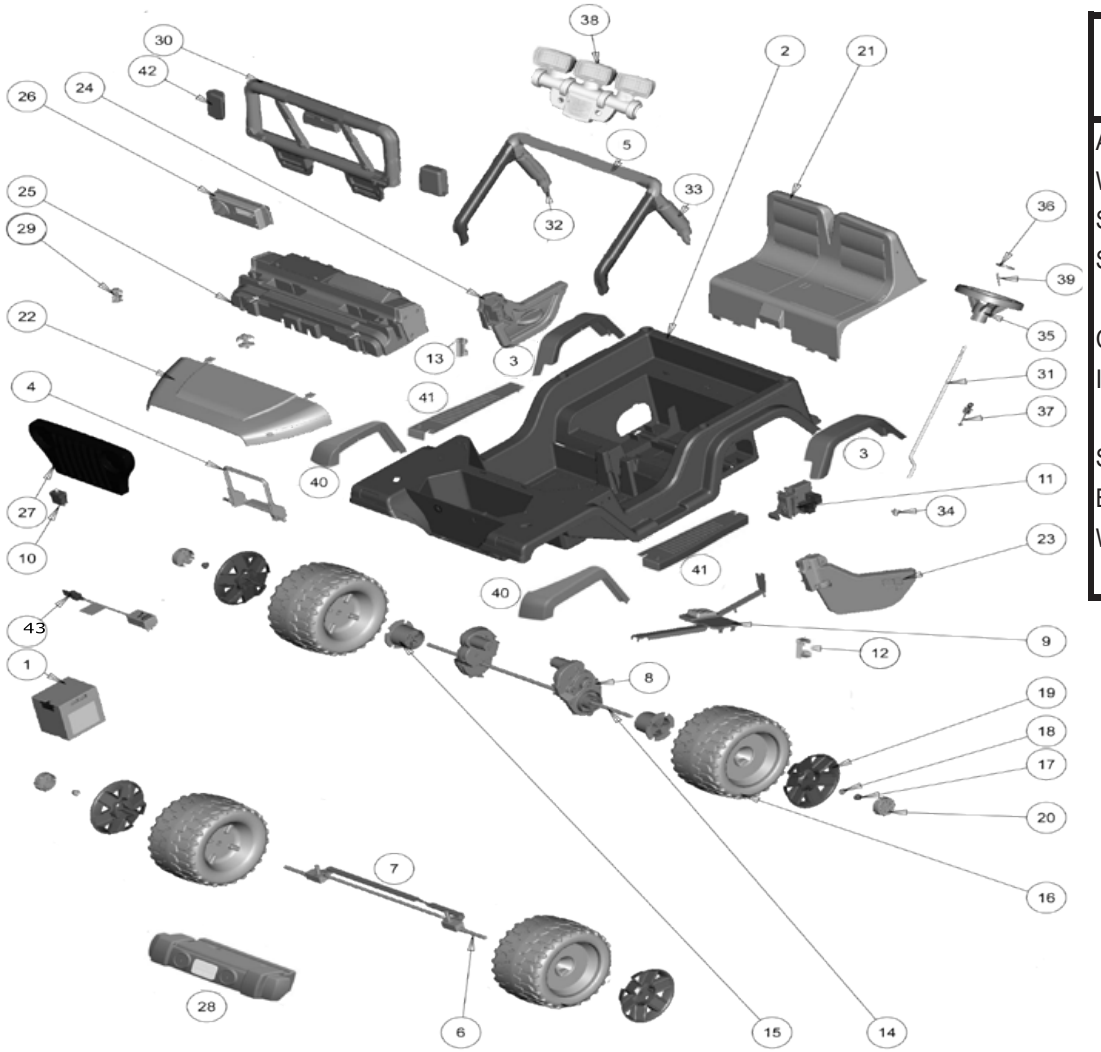

FRC33
Jurrassic Park Jeep
Advanced Series

Age Range:	3 years and up
Weight Limit:	130 lbs.
Surfaces:	Grass/Hard Surfaces
Speed:	2.5 mph For/ Low/Rev
	5.0 mph Forward
Colors:	Tan Body/Black Wheels
Intro:	2018
Suggested Retail:	$294.00
Box Dimensions:	25.5" L x 11.5" W x 54" H
Warranty:	One Year Vehicle
	Six Months Battery

Item	Part #	Description	QTY
1	00801-1869	12 Volt Battery (gray) (1)	1
2	N/A	Body	
3	3900-6434	Rear Fender Set (lt & rt) for Jeep FRC33	1
4	3800-7809	Battery Retainer	1
5	3900-6437	Rollbar for Jeep FRC33	1
6	3900-4208	Front Axle for Jeep (DRH62)	2
7	CBG65-9199	Steering Linkage for Jeep	1
8	**3900-3187**	**Motor Gearbox Assembly 23T**	**2**
9	FRC33-9309	Footboard Assy for Jeep FRC33	1
10	**00801-2039**	**Footswitch - (plunger type)**	**1**
11	Y8409-9249	Shifter for Jeep (silver)	1
12	3900-6419	Door Hinge Set (lt & rt) for Jeep FRC33	1
13	See #12	See #12	
14	3900-2679	Rear Axle for Jeep	1
15	L2170-2249	Wheel Driver (black)	2
16	BCK85-2659	Wheel for Jeep (black)	4
17	00905-0116	3/8" -16 Lock Nut	4
18	74550-2689	7/16 Round/Axle Bushing (black)	2
19	3900-6426	Hubcap for Jeep FRC33	4
20	3900-6425	Hubcap Center for Jeep FRC33	4
21	3900-6439	Seat for Jeep FRC33	1
22	3900-6423	Hood for Jeep FRC33	1
23	3900-6429	Left Door for Jeep FRC33	1
24	3900-6435	Right Door for Jeep FRC33	1
25	3900-6418	Dash w/Soundbox for Jeep FRC33	1
26	3900-6440	Soundbox for Jeep FRC33	1
27	3900-6422	Grille for Jeep FRC33	1
28	3900-6420	Front Bumper w/PW Emblem for FRC33	1
29	3900-6424	Hood Latch for Jeep FRC33	2
30	3900-6443	Windshield for Jeep FRC33	1
31	3900-2680	Steering Column for Jeep (BCK86)	1
32	3900-5762	Right Rollbar Support (2 pcs) for FRC33	1
33	3900-5763	Left Rollbar Support (2 pcs) for FRC33	1
34	00801-1620	Steering Column Cap (Fastener .354) Blk.	1
35	3900-6442	Steering Wheel for Jeep FRC33	1
36	3900-6441	Steering Wheel Button for Jeep FRC33	1
37	W9418-9369	Key for Jeep (silver)	1
38	FNK92-9409	Light Bar Front Front and Back (FRC33)	1
39	00801-1565	5/32" x 1 1/2" Pin	1
40	3900-6421	Front Fender Set for Jeep FRC33	1
41	3900-6438	Running Board Set (lt & rt) for FRC33	1
42	3900-6432	Mirror Set (lt & rt) for Jeep FRC33	1
43	00801-1778	12 Volt Charger w/Probe	1

Parts Not Shown

Part #	Description	QTY
00968-2821	**# 7R Gearbox**	**2**
3900-3719	**Motor Pinion Assembly (23T)**	**2**
3900-2705	Hardware Bag for Jeep	1
3900-6433	Parts Bag for Jeep FRC33	1
00801-1775	**Switch Control - (shifter)(rocker type)**	**2**
DNJ66-9509	**Wiring Harness for Jeep FRC33**	**1**
3900-6427	Label Sheet for Jeep FRC33	1
3900-6431	Manual for Jeep FRC33	1
3900-6428	PW Emblem FRC33	1
3900-7769	Front Axle Spring for Jeep GWX91	2

Bold and underlined parts are to be purchased and installed by Service Centers only. These items may not be sold directly to consumers by Service Centers or Fisher-Price.

12/13/2021 14:00