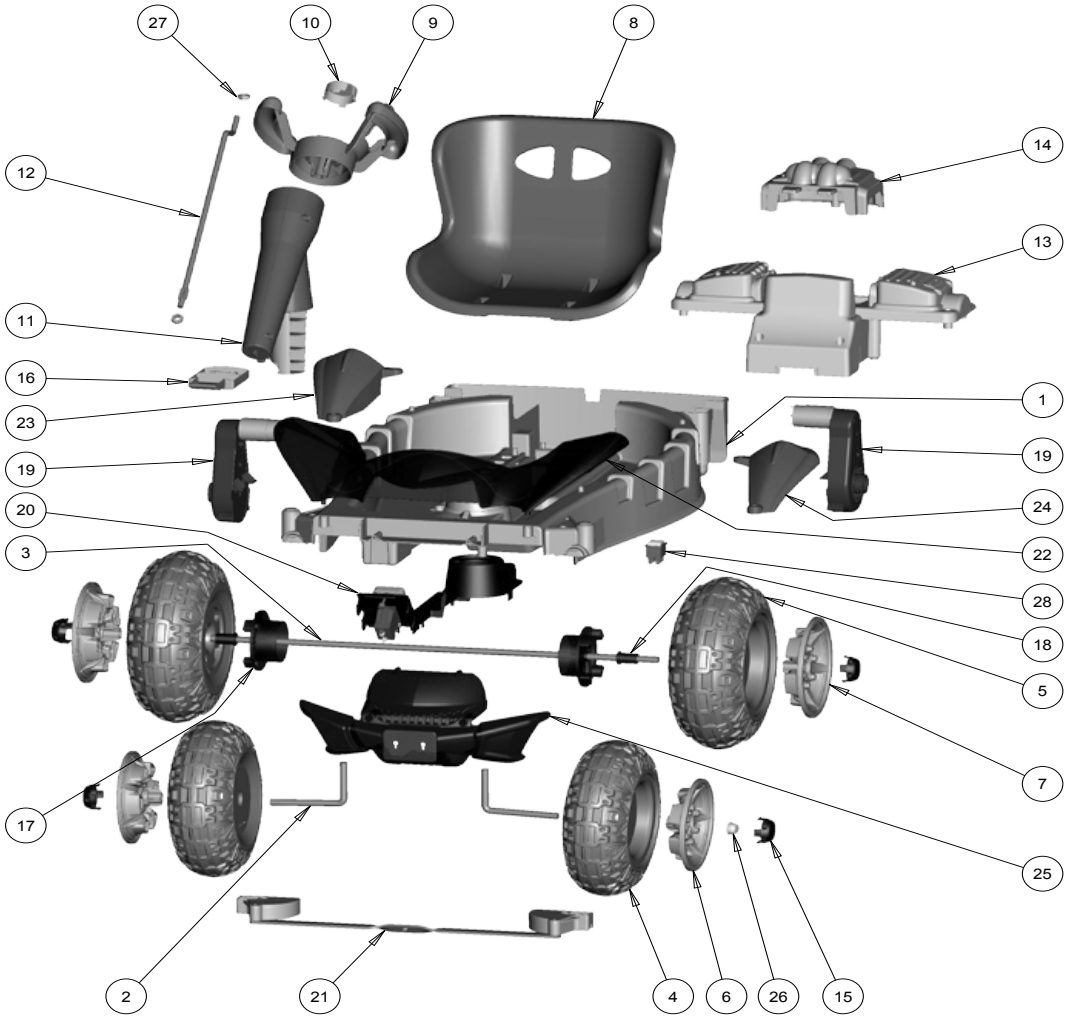

CDY12 TMNT Lil Dune Racer PW Preschool	
Age Range:	2 and up
Weight Limit:	65 Lbs.
Surfaces:	Grass and Hard Surfaces
Speed:	3.5 MPH Forward/Reverse
Colors:	Green and Purple Body
Intro:	2014
Suggested Retail:	$180.60
Box Dimensions:	26.875"x12.375"x40.75"
Warranty:	One Year Vehicle Six Months Battery

POWER WHEELS by Fisher-Price®

Item	Part #	Description	QTY
1	N/A	Body	
2	Y5014-4519	Front Axle for Lil Dune Racer	2
3	Y5014-4509	Rear Axle for Lil Dune Racer	1
4	Y5014-2709	Front Wheel for Lil Dune Racer	2
5	Y5014-2719	Rear Wheel for Lil Dune Racer	2
6	Y5014-6729	Front Rim for Lil Dune Racer	2
7	Y5014-6739	Rear Rim for Lil Dune Racer	2
8	CDY12-2039	Seat for Lil Dune Racer	1
9	CDY12-2359	Steering Wheel (yellow)	1
10	CDY12-2369	Steering Wheel Cap (yellow)	1
11	Y5014-2379	Steering Post for Lil Dune Racer	1
12	Y5014-4459E	Steering Column for Lil Dune Racer	1
13	Y5014-2409	False Engine Cover for Lil Dune Racer	1
14	CDY12-2499	Battery Cover for Lil Dune Racer	1
15	CDY12-2749	Hubcap Center for Lil Dune Racer	4
16	CDY12-2639	Bumper Connector for Lil Dune	1
17	L2170-2249	Driver	2
18	73610-2689	Bushing .437 Long Black	2
19	**74180-9519**	**#3B Motor Gearbox Assembly**	**2**
20	3900-2183	Footboard Assembly	1
21	3900-2184	Steering Linkage	1

Item	Part #	Description	QTY
22	CDY12-2419	Front Fender Set (left & right)	1
23	3900-3089	Rear Fender Set (Right & Left)CDY12	1
24	See *23	Rear Fender Set (Right & Left)CDY12	
25	Y5014-2459	Brush Guard for Lil Dune Racer	1
26	00801-1939	Cap Nut .437	6
27	00905-0116	3/8" -16 Lock Nut	1
28	00801-1773	Control Switch F/R - w/white buttons	1

Parts Not Shown

Part #	Description	QTY
00801-0712	S6V Battery w/ Internal Fuse.	1
00801-1779	S6V Charger Fused	1
CDY12-9249	Parts Bag for Lil Dune Racer	1
Y5014-9269	Hardware Bag for Lil Dune Racer	1
CDY12-0310	Label Sheet for Lil Dune Racer	1
CDY12-0720	Manual for Lil Dune Racer	1
74550-9279	**Gearbox 3B w/ Insert**	**2**
74580-9539	**3B Motor w/Pinion**	**2**
00801-2039	**Footswitch - (plunger type)**	**1**
Y5014-9799	**Harness for Lil Dune Racer**	**1**

Bold and underlined parts are to be purchased and installed by Service Centers only. These items may not be sold directly to consumers by Service Centers or Fisher-Price.

8/2/2016 10:39