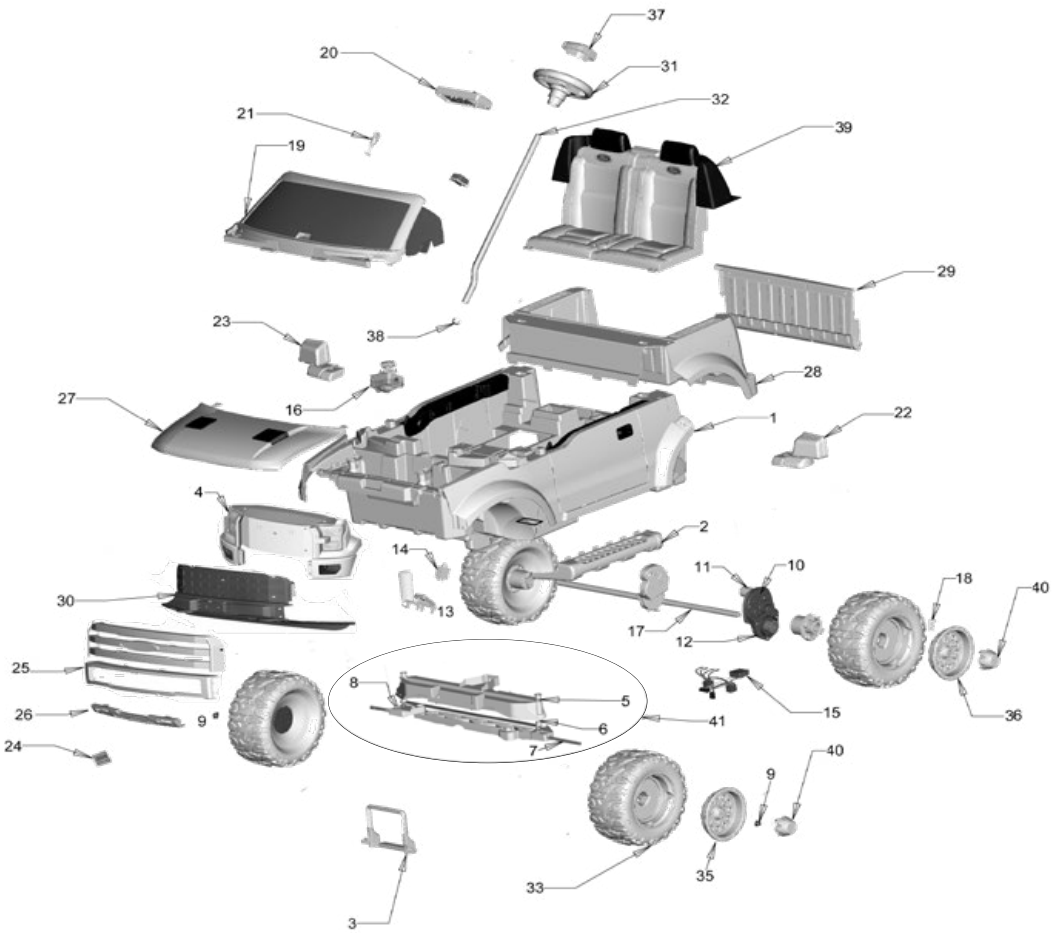

CDF54 Ford F150 Extreme Sport PW Advanced	
Age Range:	3 and up
Weight Limit:	130 Lbs
Surfaces:	Monster Traction
Speed:	2.5 and 5 MPH Forward
	2.5 MPH Reverse
Colors:	Silver/Red Body/Black Wheels
Intro:	2014
Suggested Retail:	$407.40
Box Dimensions:	29.875" x 35.875" x 51.5"
Warranty:	One Year Vehicle
	Six Months Battery

Item	Part #	Description	QTY
1	N/A	Body	1
2	W0030-2729	Step Bar (black) for Ford F-150	2
3	3800-7809	Battery Retainer	1
4	3900-3622	Front End w/Lights for (CDF54)	1
5	**See # 41**	**Bushing for Ford F-150**	**4**
6	**See # 41**	**Crossbar for Ford F-150**	**1**
7	**See # 41**	**Front Axle for Ford F-150**	**2**
8	**See # 41**	**Steering Linkage for F150**	**1**
9	00801-1939	Cap Nut .437 Retainer	4
10	**00968-2950**	**# 7R Motor Gearbox Assembly (15T)**	**2**
11	**00968-2713**	**# 7R Motor Pinion (15T)**	**2**
12	**00968-2823**	**# 7R Gearbox (15-16-17)**	**2**
13	W1070-9309	Footboard Assembly for F150 (blue)	1
14	**00801-2039**	**Footswitch - (plunger type)**	**1**
15	**3900-4051**	**Wiring Harness for F-150 (CDF54)**	**1**
16	K8285-9319	Shifter for Ford F-150	1
17	CDF54-4519	Rear Axle for F150	1
18	J4394-2149	Steering Column Cap/Rear Axle Cap (.750)	3
19	CDF54-9759	Dash w/Radio for F150 (gray/black)	1
20	**CDF54-9909**	**Radio w/Cover for F150**	**1**
21	C3493-9049	Key Housing for F150	1
22	3900-3034	Mirror Bag (left & right) (CDF54) (gray)	1
23	See # 22	See # 22	
24	00801-1518	Large Power Wheel Emblem	1
25	CDF54-2949	Grille for F150	1
26	BJM25-2049	Grille Support for F150	1
27	CDF54-9639	Hood for F150	1
28	N/A	Truck Bed	1

Item	Part #	Description	QTY
29	CDF54-9059	Tailgate for F150 (gray)	1
30	3900-2739	Front Bumper w/Logo for F150 (CDF54)	1
31	CDF54-9069	Steering Wheel for F150 (red)	1
32	CDF54-4009	Steering Column for F150	1
33	J4394-2529	Wheel for Hurricane Jeep - black	4
35	3900-2724	Rim Front Inner & Outer Bag (Chrome)	1
36	3900-2744	Rim Rear Inner & Outer Bag (Chrome)	1
37	CDF54-2191	Steering Wheel Cap for F150 (red)	1
38	J4394-2149	Retainer, Axle/Steering Column Cap	3
39	3900-3051	Seat w/Headrest for F150 (black/gray)	1
40	CDF54-2951	Center Hubcap for F150 (red)	4
41	**3900-3858**	**Front Module Assembly for Ford F150**	**1**

Parts Not Shown

Part #	Description	QTY
CDF54-0720A	Manual	1
CDF54-0310A	Label Sheet	1
CDF54-9249	Parts Bag for F150	1
3900-3031	Hardware Bag for F150	1
00801-1775	**Switch Control - (shifter)(rocker type)**	**2**
00801-1661	Battery 12v 9.5Ah (Orange Top)	1
00801-1778	12 Volt Charger w/Probe	1
00801-2084	Seatbelt (black)	1
00801-1701	.25" x 2.85" Pin for Ford F-150	1

Bold and underlined parts are to be purchased and installed by Service Centers only. These items may not be sold directly to consumers by Service Centers or Fisher-Price.

Service Bulletin 201