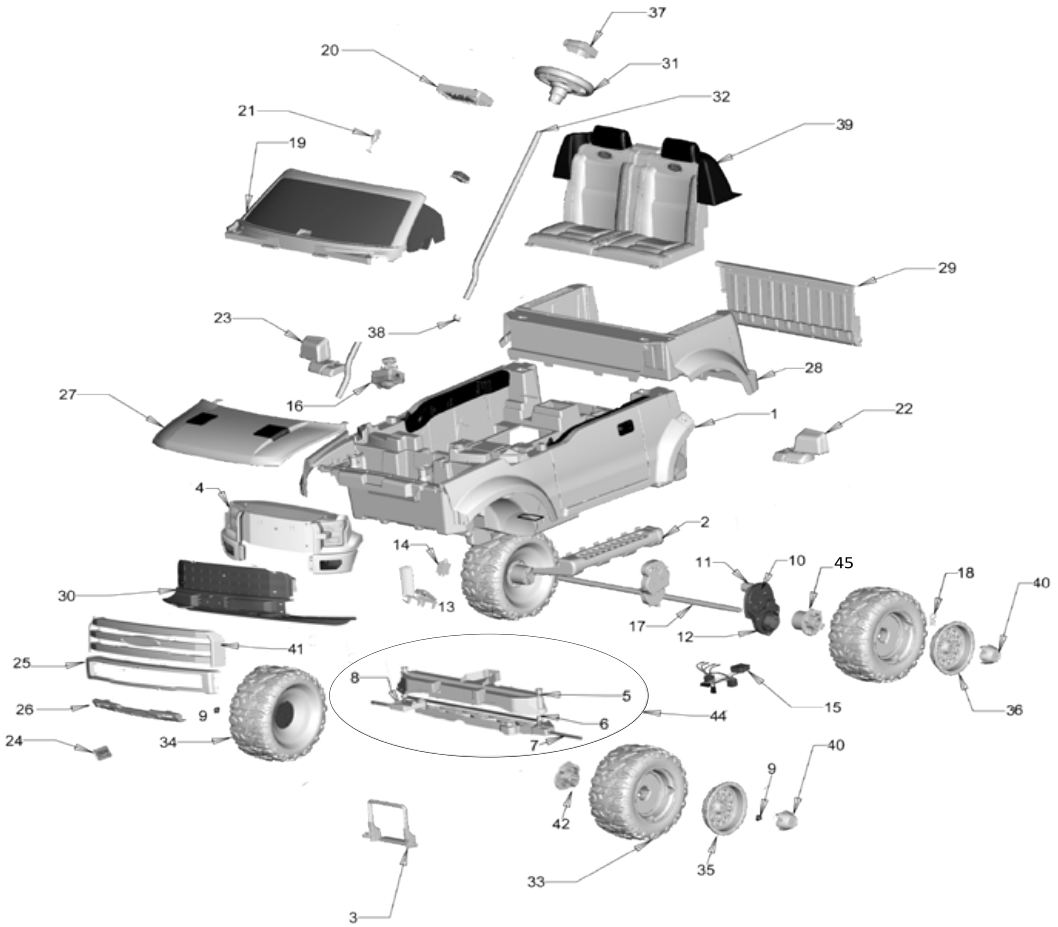

CDF53 Ford F150 Blue PW Advanced	
Age Range:	3 and up
Weight Limit:	130 Lbs
Surfaces:	Monster Traction
Speed:	2.5 and 5 MPH Forward
	2.5 MPH Reverse
Colors:	Blue Body/Black Wheels
Intro:	2014
Suggested Retail:	$375.20
Box Dimensions:	29.875" x 35.875" x 51.5"
Warranty:	One Year Vehicle
	Six Months Battery

Item	Part #	Description	QTY
1	N/A	Body	1
2	W0030-2729	Step Bar (black) for Ford F-150	2
3	3800-7809	Battery Retainer	1
4	3900-3055	Front End w/Lights for CDF53	1
5	**See #44**	Bushing for Ford F-150	4
6	**See #44**	Crossbar for Ford F-150	1
7	**See #44**	Front Axle for F-150	2
8	**See #44**	Steering Linkage for F-150	1
9	00801-1939	Cap Nut .437 Retainer	4
10	**00968-2928**	**# 7 Motor Gearbox Assembly**	**2**
11	**00968-2720**	**# 7R Motor Pinion**	**2**
12	**00968-2823**	**# 7R Gearbox**	**2**
13	3900-3881	Footboard Assembly (CDF53)	1
14	**00801-2039**	**Footswitch - (plunger type)**	**1**
15	**T6991-9799**	**Wiring Harness for Ford F-150**	**1**
16	K8285-9319	Shifter for Ford F-150	1
17	K8285-4519	Rear Axle for F150	1
18	00801-1712	Cotter Pin for Ford F-150	2
19	CDF53-9759	Windshield/Dash Assembly w/Radio	1
20	**CDF53-9909**	**Radio for F150**	**1**
21	C3493-9049	Key Housing for F150	1
22	3900-3033	Mirror Bag (left & right)	1
23	See # 22	See # 22	
24	00801-1518	Large Power Wheel Emblem	1
25	BJM25-6999	Trim (Chrome) for F150	1
26	BJM25-2049	Grille Support for F150	1
27	CDF53-9639	Hood for F150 (Blue)	1
28	N/A	Truck Bed	1

Item	Part #	Description	QTY
29	CDF53-9059	Tailgate for F150	1
30	BJM25-9909	Front Bumper w/Logo for F150	1
31	K8285-9069	Steering Wheel for Ford F-150 (black)	1
32	K8285-4009	Steering Column for Ford F-150	1
33	K8285-2239	Left Wheel for F150	2
34	K8285-2039	Right Wheel for F150	2
35	3900-3971	Rim Front Outer F150 (Chrome)	2
36	3900-3054	Rim Rear Outer F150 (Chrome)	2
37	K8285-2199	Steering Wheel Cap for Ford F-150	1
38	J4394-2149	Retainer, Axle/Steering Column Cap	1
39	CDF53-9859	Seat for F150	1
40	BJM25-6189	Hubcap Center (Chrome)	4
41	BJM25-6949	Grille (Chrome) for F150	1
42	BJM25-2429	Rim Front Inner F150 (Black)	2
44	**3900-3857**	**Front Module Assembly for F150**	**1**
45	BJM25-2279	Wheel Driver for F150 (black) (short)	2

Parts Not Shown

Part #	Description	QTY
CDF53-0720A	Manual	1
CDF53-0320A	Label Sheet	1
3900-3030	Hardware Bag for F150	1
00801-1775	**Switch Control - (shifter)(rocker type)**	**2**
00801-1701	.25" x 2.85" Pin for Ford F-150	1
00801-1869	12 Volt Battery	1
00801-1778	12 Volt Charger w/Probe	1
00801-2084	Seatbelt (black)	1
BCV58-9249	Parts Bag	1

Bold and underlined parts are to be purchased and installed by Service Centers only. These items may not be sold directly to consumers by Service Centers or Fisher-Price.

Service Bulletin 201