POLE MODEL II

S=1/40

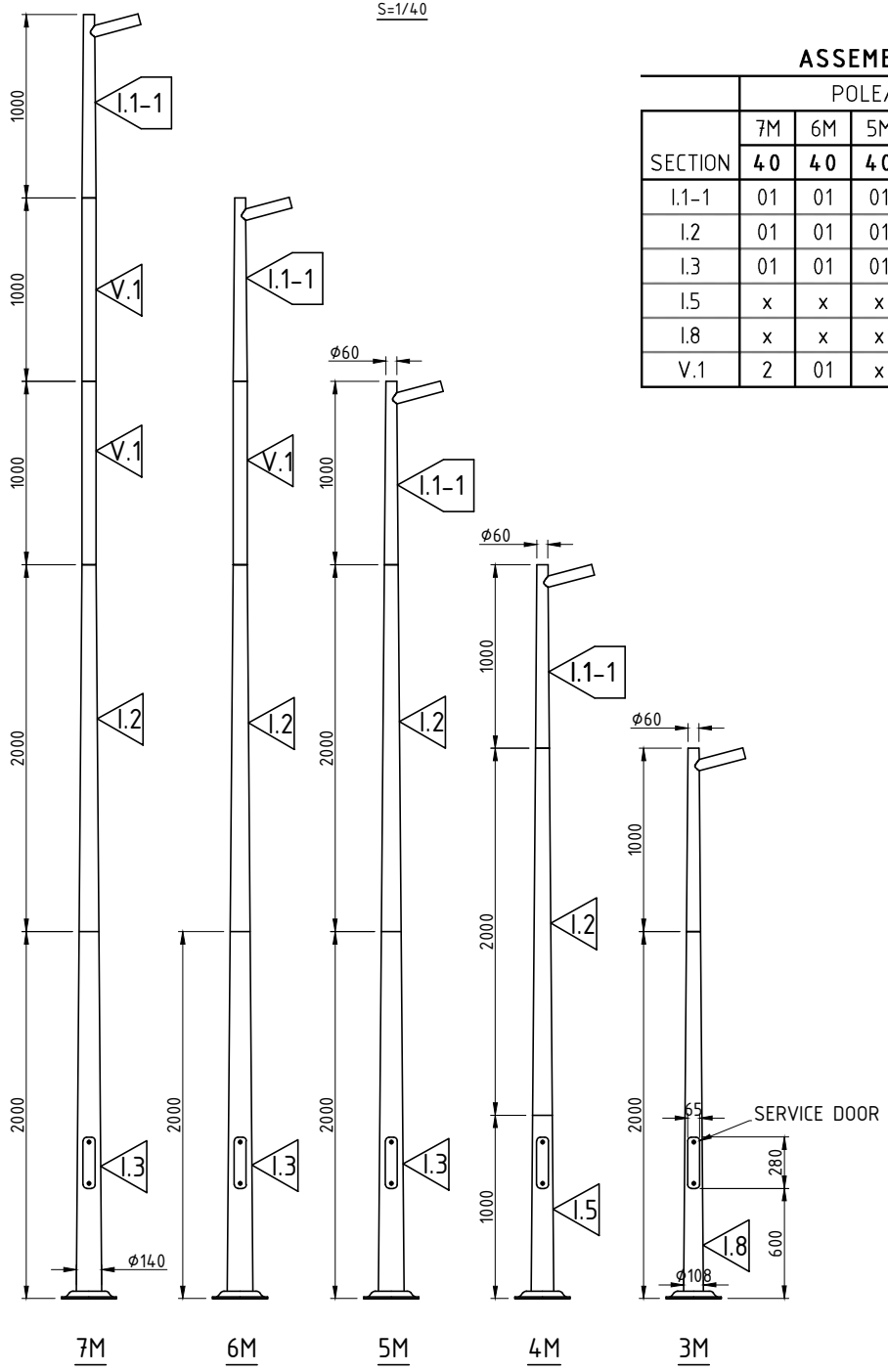

ASSEMBLY POLE

	POLE/WIND LOAD (m/s)					
	7M	6M	5M	4M	3M	
SECTION	**40**	**40**	**40**	**45**	**45**	WEIGHT(KG)
I.1-1	01	01	01	01	01	6,71
I.2	01	01	01	x	x	15,2
I.3	01	01	01	x	x	27,43
I.5	x	x	x	01	x	17,69
I.8	x	x	x	x	01	22,66
V.1	2	01	x	x	x	6,67

DETAIL BASE

S=1/12

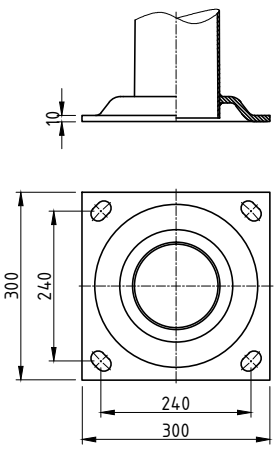

DETAIL SERVICE DOOR

S=1/8

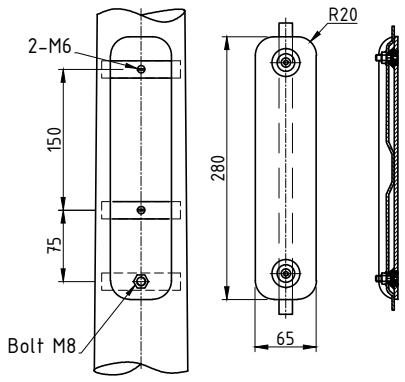

STANDARD SPECIFICATION:

1. Design : BS EN:40
2. Material : JIS G3101 SS400
3. Welding : AWS D1.1
4. Hot dip galvanizing : ASTM A123

No		SIGNA TURE	DATE
4			
3			
2			
1			
APPROVED BY			
R&D CENTER			
CHECKED BY			
DESIGNED BY			

POLE MODEL I

GENERAL DRAWING

FILE No:

INST DWG SIGN

DWG SIGN

MATERIAL			DRAWING No: I/1	TOTAL OF DWG:
Q'TY	WEIGHT	SCALE		
		AS-SHOWN		