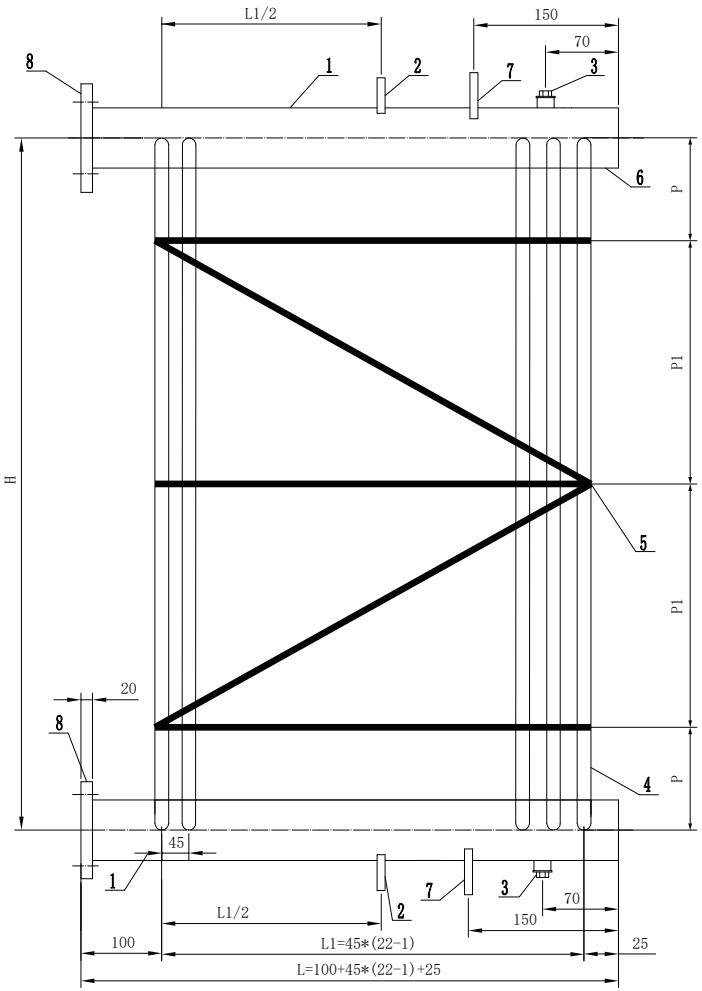

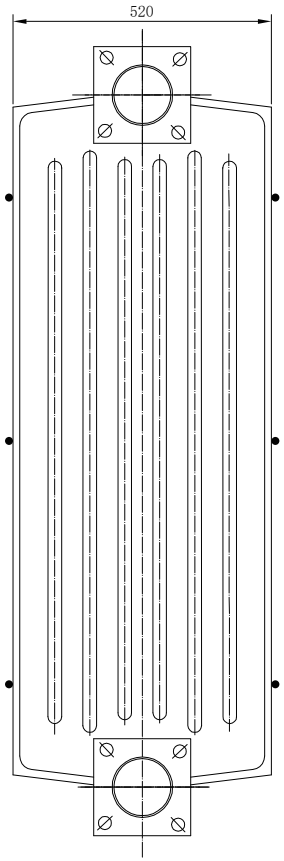

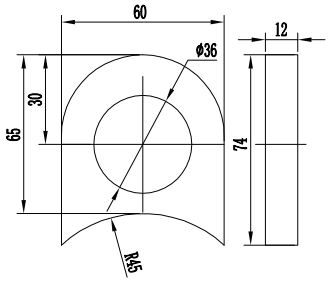

Lifting Lugs

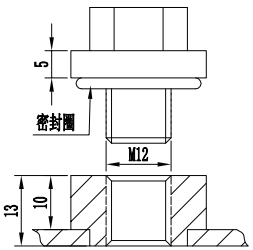

Air(Oil) release plug

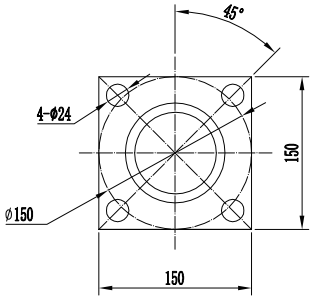

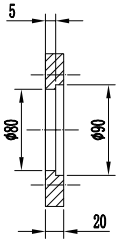

Flange

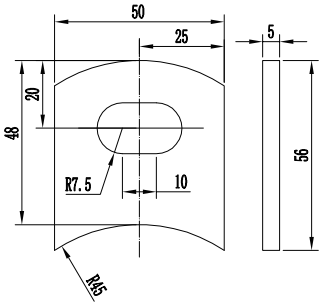

Fixing plate

The meanings of each letter in the figure are as follows:
H - Center distance 1800mm
L - Total length of the manifold
N - Total number of Radiator Fins
B - Radiator blade width 520mm
P - Iron Rod bar Distance 100mm
P1 - Iron Rod bar Distance 800mm

No.	Spec.	Name	Nos	Material	Weight	Remark
8	150X150	Flange	2			
7	As drawing	Fixing plate	2			
6		Cover	2			
5	Φ10	Stiffening rod				
4		Fin	N			
3	M12 ¢18	Air(Oil) release plug	2			
2	65X60X12	Lifting Lugs	2			
1	¢89	Header Tuber	2			

Mark	No	Document NO	Sign	Date
Design	Huang	Standard		
Check		Approval		
Check	Jiang			
Process		Date	2022.09	

PCH-N/520

Mark | Weight

Page 1

GANELEC

OW220903-1

22FIN X 1800 X 520mm

底图总号
签 字
日 期