INSTALLATION MANUAL
VOYAGER RACK BAG INSTALLATION INSTRUCTIONS

Parts Included

A. Voyager Bag
B. Shoulder Strap
C. Rain Cover

Note:

The bag comes with a removable shoulder strap for your ease Before riding, always remove the shoulder strap and store it inside the bag.

Step 1

Place the bag on top of the touring luggage rack so that it is centered and stable.

Step 2

With the bag in position, attach the 4 quick release buckles and straps securely around the luggage rack structures so the bag is held firmly in place by four straps. (See Figure A).

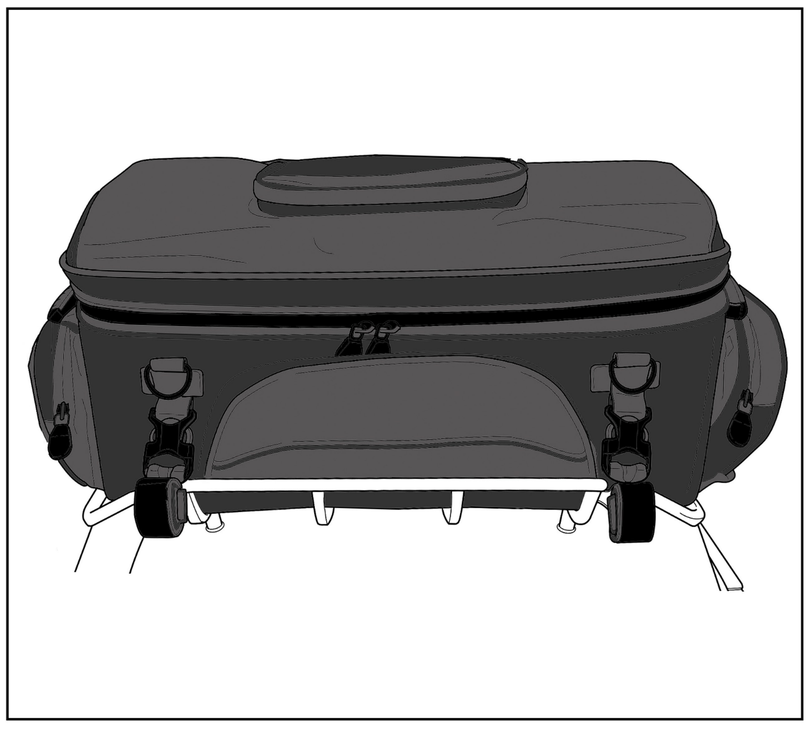

Fig A. Luggage Rack Installed (Rear)

Step 3

Pull straps tight to secure the bag to the luggage rack.

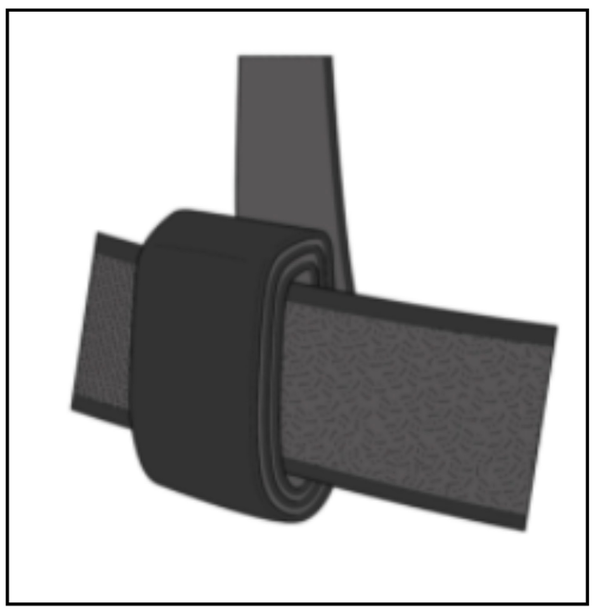

Fig B . Hook & Loop tabs to secure excess strap

Step 4

Ensure the straps are tightly fastened and roll up and secure any excess strap material using hook and loop tabs. (See Figure C).

COPYRIGHT VIKING BAGS

Rain Cover Installation

Step 1

Pull the rain cover over the bag and pull the drawstring at the bottom to tighten.

Step 2

Secure the drawstring in place using the barrel lock.

Warnings!

Do not overload the bag or luggage rack. For maximum luggage rack load capacity, consult guidelines in the luggage rack manual.

Do not let any excess strap hang freely as it may obstruct the function of the bike and may cause accidents resulting in injury.

Regularly check the straps to ensure the bag is securely in place and under tension.

Viking Bags is not responsible for any damage or injury caused by improper installation or use of the product.

COPYRIGHT VIKING BAGS