Model 1400

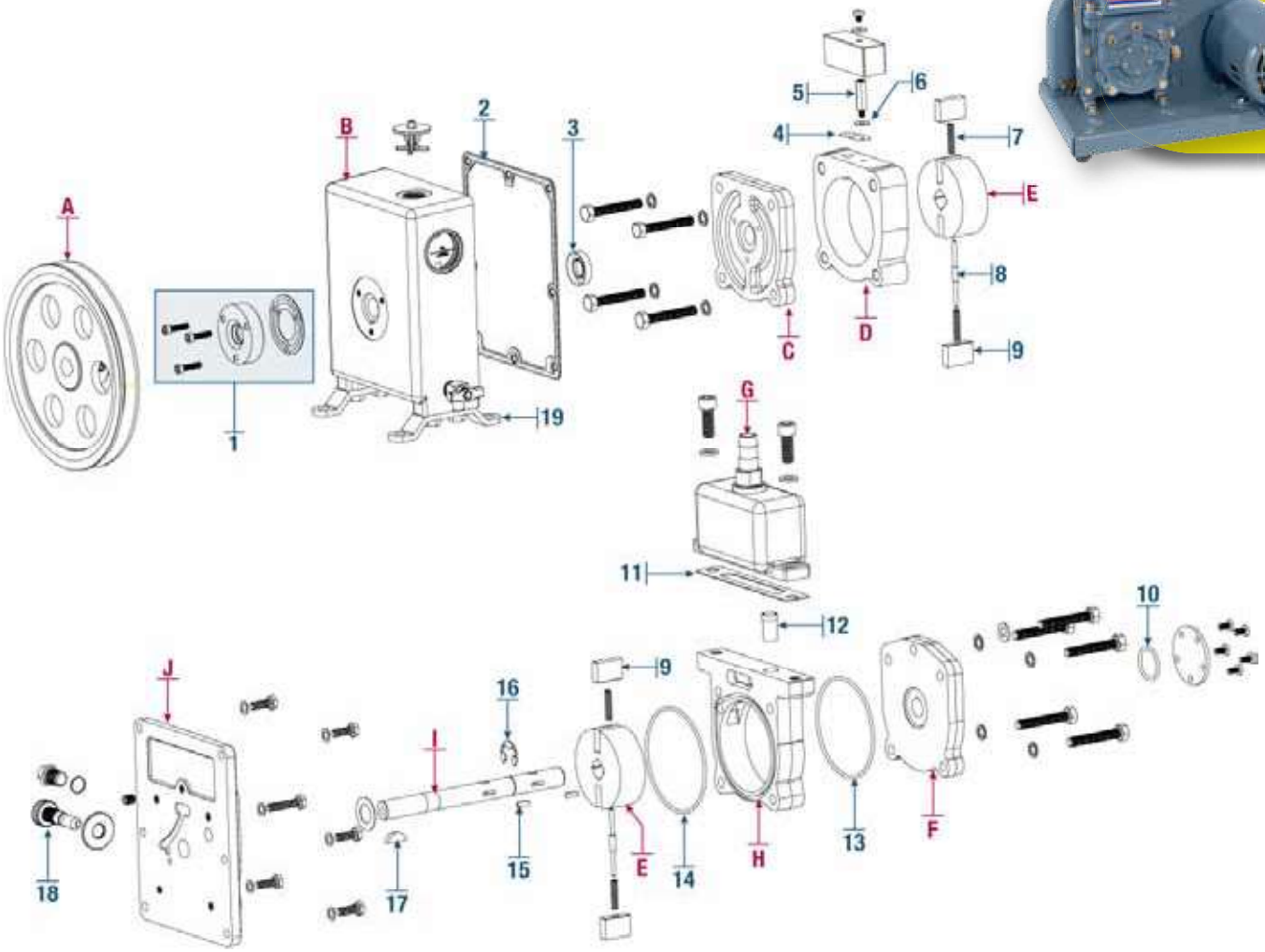

Major Repair Kit CAT. No. 1400K-04 for Model 1400

ID	Qty.	Description	ID	Qty.	Description
Major Repair Kit 1400K-04			12	1	Intake Screen
1	1	Mechanical Shaft Seal Kit, 5/8" **CAT. No. 1401E**	13	1	O-Ring
2	1	Gasket Oil Case	14	1	O-Ring
3	1	Lip Seal	15	2	Woodruff Key
4	1	Exhaust Valve	16	1	Retaining Ring
5	1	Stud for Valve Cover	17	1	Woodruff Key
6	1	Flat Washer Brass			
7	4	Vane Spring			
8	2	Spring Holder for Vane			
9	4	Vane			
10	1	O-Ring	**Minor Repair Kit 1400K-03**		
11	1	Gasket, Intake Chamber Cover	Contains same as Major Kit 1400K-04 except vane ID No. 9.		

Individual Spare Parts for Model 1400

ID	Qty.	CAT. No.	Description	ID	Qty.	CAT. No.	Description
A	1	41-2191	Pump Pulley with Set Screw			★1417	Standard Exhaust Filter
B	1	61-8540	Oil Case Assembly			★1417L	Replacement Exhaust Filter Element (2 pk._
C	1	41-1045	Front Plate			★1407K-11	DuoSeal Vacuum Pump Oil -1 Qt.
D	1	41-1042	Inner Ring			★1407K-15	DuoSeal Vacuum Pump Oil -1 Ga.
E	1	41-1040	Rotor			★331040-5	5' x 7/16" I.D. Vacuum Hose
F	1	61-8702	Back End Plate	9	1	41-1059	Vane
G	1	1393J	Hose Adapter for 7/16" I.D. Hose		1	61-8901	Belt Guard
H	1	61-8675	Intake Ring		1	61-8916	Pump Base
I	1	41-1060	Shaft	18	1	41-1736	Gas Ballast Valve
					1	41-0551	Motor Pulley with Set Screw
1	1	★1401E	Mechanical Shaft Seal Kit, 5/8"	19	1	726130	Oil Drain Valve
	1	★1401E-01	Lip Shaft Seal Kit, 5/8"		1	61-8622	1/3 HP Motor, 115V, 60Hz, 1Ph
	1	★1400A	V-Belt				

★ - Suggested Spare and Consumable Parts