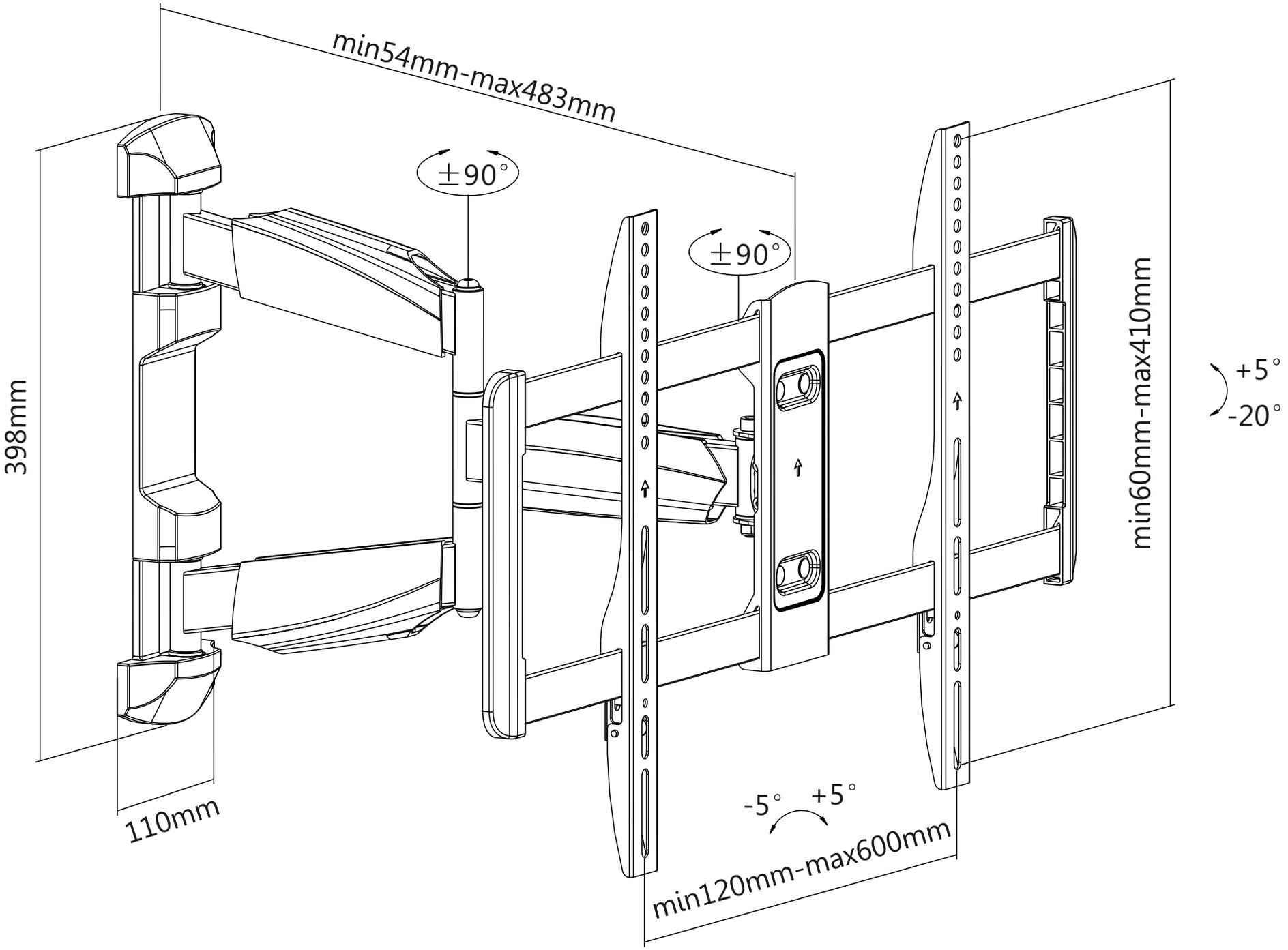
min54mm-max483mm
±90°
±90°
398mm
110mm
min60mm-max410mm
+5°
-20°
-5°
+5°
min120mm-max600mm