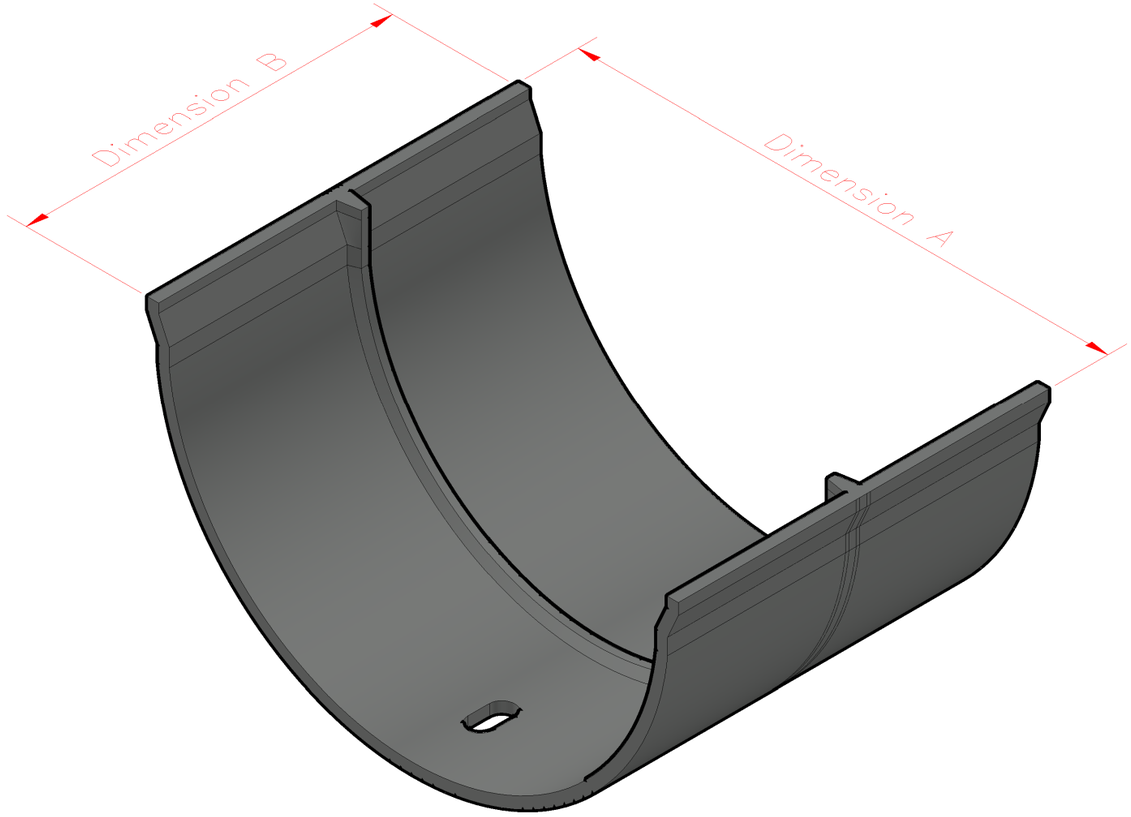


| Deep Beaded Half Round Gutter Union Clip | | |
|---|---|---|
| Ref. | A | B |
| 4 $\frac{1}{2}$ DBHR9 | 148 | 102 |

CONVENTIONS BS 1192

HINGE
DOOR
PARALLEL VENT
HINGE
VENT

+000.000

Elevation viewed externally
Arrows point to hinge

1
1001

Detail 1 drawn on drawing No (D)1001

CDM REGULATIONS

| HAZARD | ADDED | MITIGATED | ACCESSED |
|---|---|---|---|
| | | | |

SPECIFICATION

| REV | DATE | DESCRIPTION |
|---|---|---|
| P1 | 00.00.0000. | First Issue |
| REVIEW | - | |

ALUMINIUM CLADDING LTD

Aluminium Cladding Ltd
Unit 15
Brindley Road
Bayton Road Industrial Estate
Exhall
CV7 9EP

| REVISION | DRAWN BY | CHECKED BY |
|---|---|---|
| . | CB | CB |

DRAWING No
ACL-HB DBHRG 09

DRAWING TITLE
Deep beaded Half Round Gutter Union Clip

STATUS
.

PROJECT
.

CONTRACTOR
.

| DATE | SCALE | JOB No |
|---|---|---|
| 08.01.2025. | N.T.S. | . |

50 100