TRUSS DOCK INSTALLATION INSTRUCTIONS

#1- INSERT SPACER TUBE (PN70002) WITHIN TOP AND BOTTOM RAIL USING PRE PUNCHED HOLES OR AT DESIRED LOCATION.(SEE PAGE #2)

#2- ATTACH LEG RETAINER TO TRUSS USING 2 $\frac{1}{2}$" CARRIAGE BOLTS (PN00527) AND FLANGE NUTS (PN00035). ENSURE CARRIAGE BOLTS ARE MOUNTED IN THE CORRECT ORIENTATION (AS SHOWN IN IMAGE.)

#3- ONCE LEG RETAINER IS MOUNTED AND IN POSITION INSERT LEG THROUGH TOP OF RETAINER (ENSURE LEG IS ORIENTED AS SHOWN WITH HOLE CLOSE TO BASE OF LEG), PLACING IT IN POSITION WITH FAST PIN (PN00643). THE LEG SHOULD BE PROJECTING UNDER LEG RETAINER BY A FEW INCHES.

#4- INSERT WELDED STEM OF CRADLE UP INTO BASE OF LEG, FASTENING THEM TOGETHER WITH $\frac{3}{8}$ - 16 X 2 $\frac{3}{4}$" HEX BOLT (PN00268)

#5- PLACE LEG RETAINER CAP (PN01503), SQUARE TUBING PLUGS (PN1045) AND LEG CAP (PN01008) AS SHOWN

#6-ONCE INSTALLED PLACE CRADLE BELOW SURFACE OF WATER BY A FEW INCHES, FIX IT IN POSITION WITH FAST PIN, PLACE KAYAK OVER CRADLE, STEP INTO KAYAK GENTLY USING LEG OR LEG RETAINER FOR BALANCE, WHEN READY PUSH OFF. REPEAT THESE STEPS IN REVERSE TO.GET OUT.

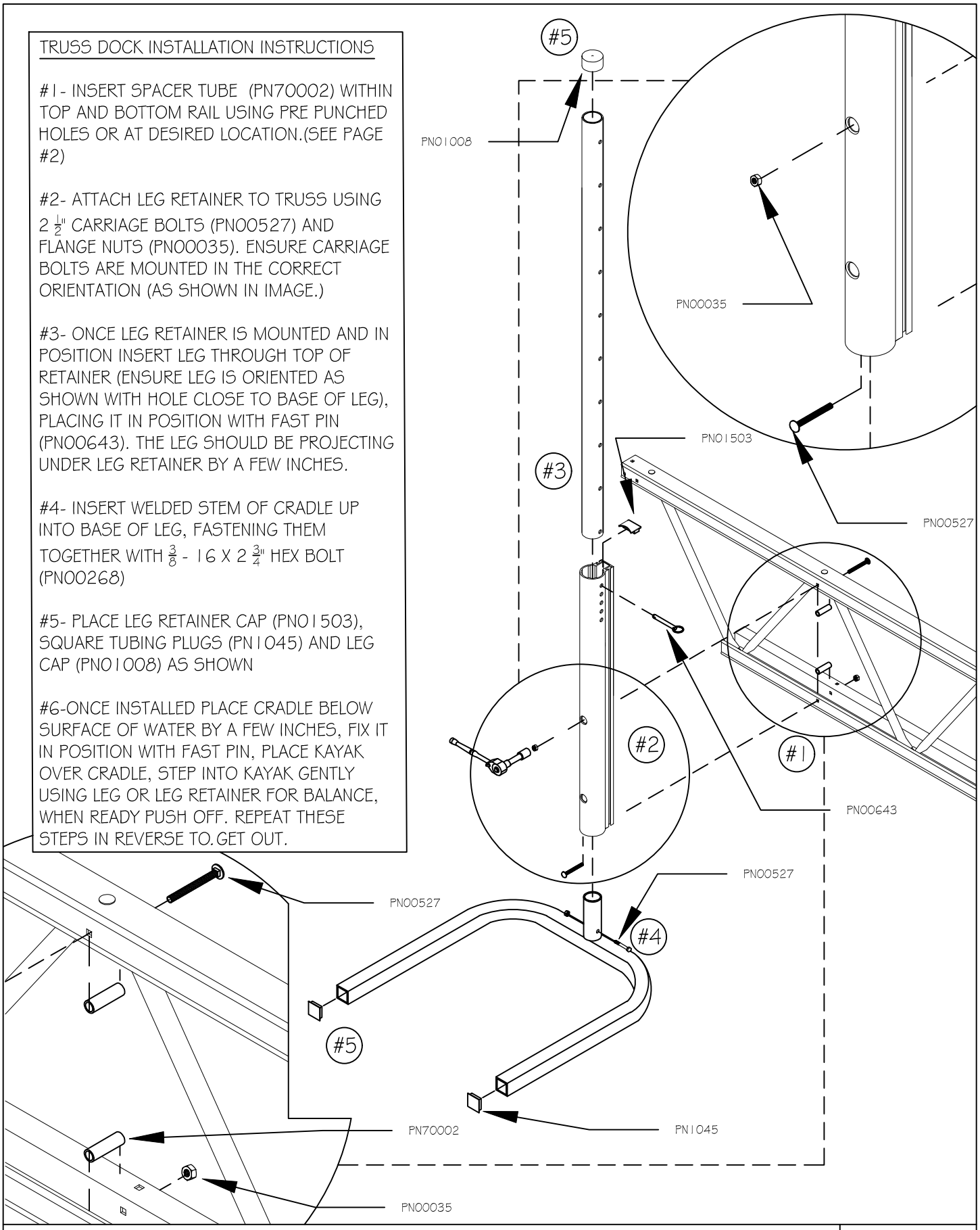

FENDOCK

WWW. FENDOCK.COM / INFO@FENDOCK.COM / (888) 336-3625 / (613) 722-6581

NOV. 07 / 2022	
DRAWN BY SW	DWG NO 1

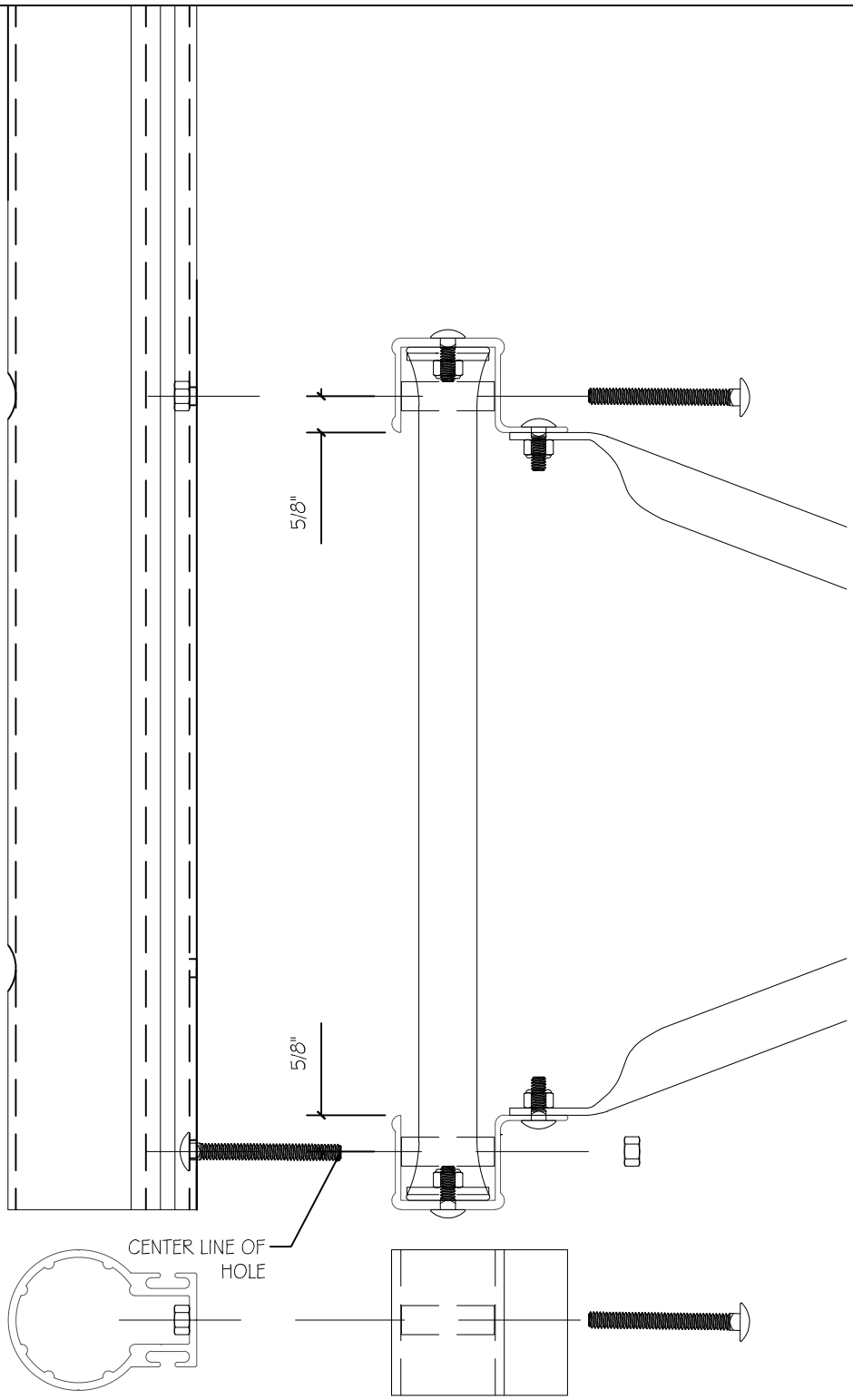

FENDOCK

WWW. FENDOCK.COM / INFO@FENDOCK.COM / (888) 336-3625 / (613) 722-6581

NOV. 07 / 2022

DRAWN BY SW