HARDEN STEEL DACROMET COATING

NORDLOCK WASHER

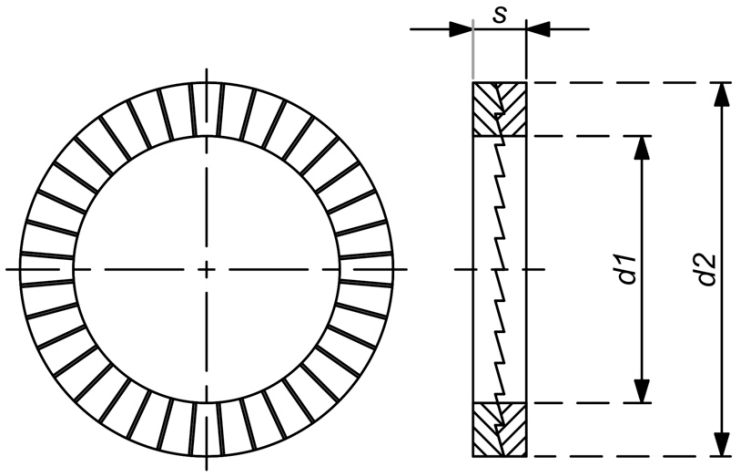

Nominal Dimension

Size	M3	M4	M5	M6	M8	M10	M12	M14	M16	M18
d1	3.4	4.4	5.4	6.5	8.6	10.7	13.0	15.2	17.0	19.5
d2	7.0	7.6	9.0	10.8	13.5	16.6	19.5	23.0	25.4	29.0
s	1.7	1.7	1.7	1.7	2.7	2.7	2.7	3.7	3.7	3.7

Size	M20	M22	M24	M27	M30	M33	M36	M39
d1	21.4	23.4	25.3	28.4	31.4	34.4	37.4	40.4
d2	30.7	34.5	39.0	42.0	47.0	48.5	55.0	58.5
s	3.7	3.7	3.7	6.7	6.7	6.7	6.7	6.7

Unit: mm

Available Sizes:

SIZE (DIA)	M3	M4	M5	M6	M8	M10	M12	M14	M16	M18	M20	M22	M24	M27	M30	M33	M36	M39
-	✓	✓	✓	✓	✓	✓	✓	✓	✓	✓	✓	✓	✓	✓	✓	✓	✓	✓