Altair Kinsley Vanity Collection 536048-GR-CA

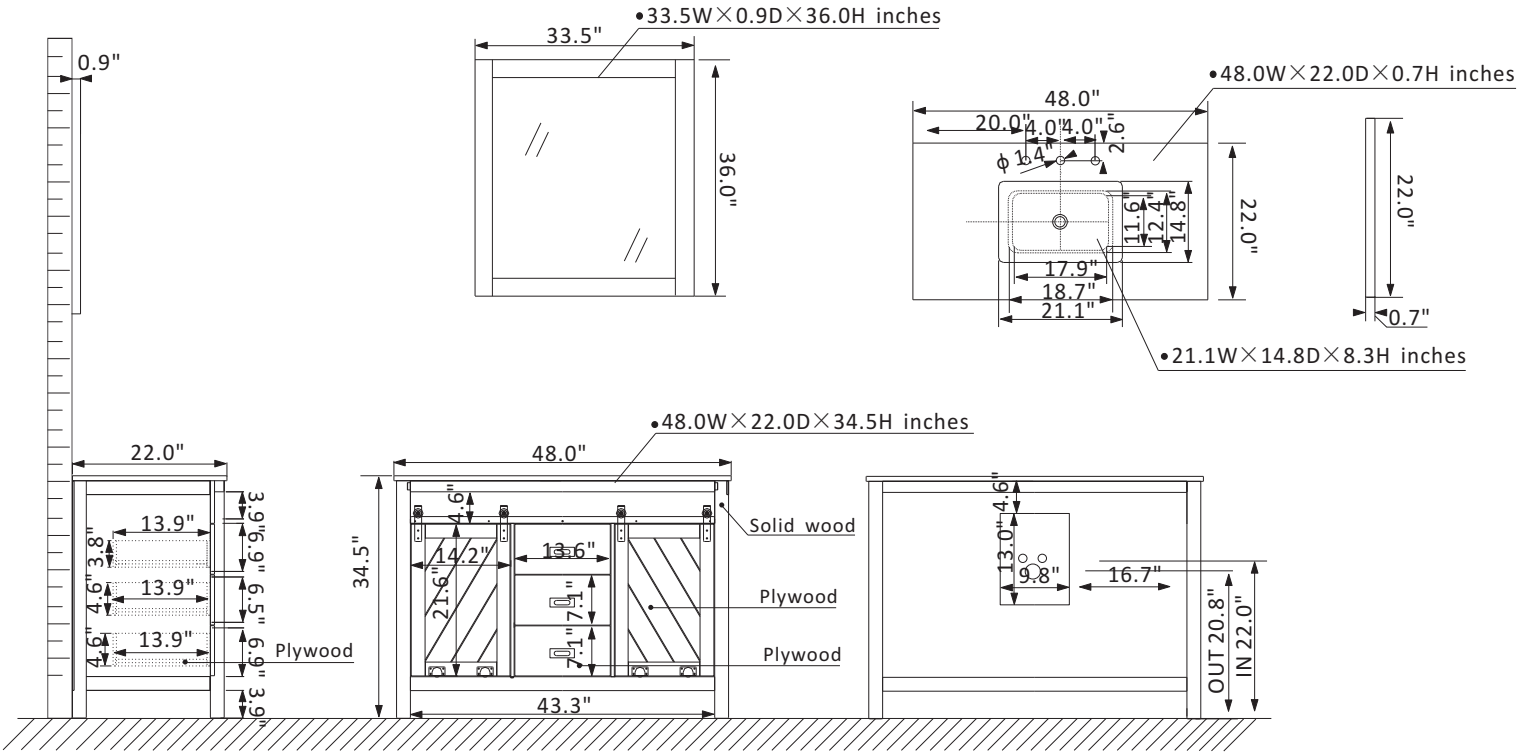

Features

Construction: Solid wood / plywood
Finish: White or Gray Finish
Countertop: Natural Carrara white marble
Sink: Rectangular, undermount ceramic basin with overflow included
Faucet: Countertop pre-drilled for 8” wide faucet hole
Door/Drawer: 2 soft-sliding doors and 3 soft-closing drawers
Mirror: Single matching, framed mirror
Hardware: Zinc alloy black finish hardware
Installation: Easy plumbing and faucet installation*

* Does not include faucet, drain assembly, backsplash or P-trap

ALTAIR
FASHION BATHROOM LIFE